SUNTEC™

Pump up innovation

EXPERT IN LOW CARBON FLUID REGULATION

B100 LOW CAPACITY

A-7000
SINGLE-STAGE



- Hydraulic cut-off by diaphragm valve,
- Single-pipe or two-pipe installations,
- Lift or gravity feed applications,
- Suitable for biofuel up to B100, No. 2, No. 1 fuel oil or kerosene,
- Rated speed: 1725 or 3450 rpm,
- Pressure range: 100 - 200 psi, or 100-150 psi,
- Bleeder valve (automatic bleeding in 2 pipes).

A-3000
SOLENOID SINGLE-STAGE



- Combines both diaphragm valve and solenoid cut-off,
- Single-pipe or two-pipe installations,
- Lift or gravity feed applications,
- Suitable for biofuel up to B100, No. 2, No. 1 fuel oil or kerosene,
- Rated speed: 3450 rpm,
- Pressure range: 100-200 psi,
- Bleeder valve (automatic bleeding in 2 pipes).

MEDIUM & HIGH CAPACITY

J
MEDIUM CAPACITY



- Capacities up to 85 GPH,
- Single stage,
- Pressure regulating valve with or without cut-off,
- Single-pipe or two-pipe installations,
- Rated speed : 1725 or 3450 rpm,
- Six pressure options from 10 to 300 psi,
- Lift or gravity feed applications,
- Suitable for biofuel up to B100, No. 4 and lighter fuel oils,
- Bleeder valve (automatic bleeding in 2 pipes).

R
MEDIUM CAPACITY



Webster by SUNTEC

- Capacity up to 75 GPH,
- Single and two stage,
- Single-pipe or two-pipe installations,
- Rated speed : 1725 or 3450 rpm,
- Eight pressure options from no regulator to 300 PSI,
- Incorporate Webster unique rotary filter, reducing the need for periodic cleaning.

V
HIGH CAPACITY



Webster by SUNTEC

- Capacity up to 180 GPH,
- Single and two-stage,
- Two-pipe installations,
- Rated speed : 1725 or 3450 rpm,
- Four pressure options from no regulator to 330 psi.

ACCESSORIES

OSV
OIL SAFETY VALVES



Webster by SUNTEC

- Maximum protection against line leaks and tank siphoning,
- Prevents high pressure damage in gravity feed or boost pump installations,
- Suitable for B6-B100, No.2, No.1 fuel oil, diesel, kerosene and waste oil,
- Mount in any position.

R & C
SHUT-OFF VALVES



- For instantaneous, redundant cut-off,
- Closes when electrical current to solenoid is interrupted,
- Blocks oil flow to nozzle when closed,
- R models mount directly to the fuel unit,
- C models mount to the burner or other remote location,
- Use with any fuel unit rated up to 16 GPH,
- Available for 24 V AC, 115 V AC, 220 V AC.

B100 MEDIUM CAPACITY

B-8000
TWO-STAGE



- Hydraulic cut-off with/without diaphragm valve,
- Two-pipe installations up to 17" hg. vacuum,
- Lift or gravity feed applications,
- Suitable for biofuel up to B100, No. 2, No. 1 fuel oil or kerosene,
- Rated speed: 1725 or 3450 rpm,
- Pressure range: 100-200 psi,
- Also available in high pressure : 200-300 psi,
- Bleeder valve (automatic bleeding in 2 pipes).

B-4000
SOLENOID TWO-STAGE



- Combines both diaphragm valve and solenoid cut-off,
- Two-pipe installations up to 17" hg. vacuum,
- Lift or gravity feed applications,
- Suitable for biofuel up to B100, No. 2, No. 1 fuel oil or kerosene,
- Rated speed: 3450 rpm,
- Pressure range: 100-200 psi,
- Bleeder valve (automatic bleeding in 2 pipes).

B-8800
SOLENOID TWO-STAGE, TWO-STEP



- Two step pump with low/high fire operation, no cut-off,
- Two-pipe installations up to 17" hg. vacuum,
- Lift or gravity feed applications,
- Suitable for biofuel up to B100, No. 2 fuel oil,
- Rated speed: 3450 rpm,
- Adjustable pressure ranges: Low fire : 100-200 psi
  High fire : 200-300 psi
- Bleeder valve (automatic bleeding in 2 pipes).

WASTE OIL APPLICATIONS

A1RA & A2RA
SINGLE-STAGE



- Suitable for waste oil or No 4 fuel oil application and lower,
- Single-pipe installations,
- Rated speed : 1725 or 3450 rpm,
- With or without pressure regulator,
- Pressure range : 10 - 20 psi, 50 - 65 psi, or 100 - 150 psi,
- With or without cut-off.

1RR
SINGLE-STAGE



- Viscosity range : 34 - 7000 SSU,
- Single-pipe installations only when used with thick oil,
- Rated speed : 1725 rpm,
- Pressure range : 30-50 PSI,
- With cut-off.

PUMP & MOTOR

SIMPLEX



- Complete assemblies with or without drive motor,
- Available from 15 to 135 GPH model,
- With Suntec or Webster pumps,
- Internal valve regulator : 10 - 20 PSI or 10 - 80 PSI,
- Available in single or three phase,
- Capable of supplying fuel oil pump to heating units or tank located up to 200 feet above the supply pump.

DUPLEX



- Two pump/motor assemblies with a pre-piped, common discharge manifold,
- One pump/motor unit operates continuously, second unit provide backup service if the main pump fails,
- Available with manual and automatic controls,
- Duplex automatic series are designed specifically for buildings where a constant supply of oil must be assured.

All our pumps are UL recognized or UL approved.

B100
LOW CAPACITY

SUNTEC™ SINGLE STAGE PUMP

A-7000B

A-7000B - US - Ed. 3 - November 2024

SUNTEC **A-7000B** model contains a unique and hydraulic safety cut-on/off, driven by a motor speed dependent device, and a high single pipe lift capacity. (Except A-77xx models). This unit is supplied for 1-pipe operation, without by-pass plug installed. Please verify before installation.

COMPATIBILITY

Fuel oil #2 and lighter, B6-B100 (blends from 6% up to 100% biodiesel, per ASTM D396).

PUMP OPERATING PRINCIPLE

As the motor starts, the fuel from the gearset flowing through the cone valve creates a pressure drop across the diaphragm valve. When the pressure difference is sufficient to overcome the spring force, the diaphragm valve closes and the pressure is built up causing the piston to open and the fuel flow through the nozzle port.
The piston spring is adjusted such that a given nozzle pressure can be maintained while any resulting excess fuel is dumped.
Cut-off speed is factory set so that the cone valve gives the necessary pressure drop to open the diaphragm valve. This in turn reduces the piston chamber pressure and the piston shuts off the nozzle.

One pipe installation :
The by-pass plug must not be installed. The excess fuel is returned back to the inlet.

Two pipe installation :
The steel plug of the return port must be removed and the by-pass plug must be inserted in the return port allowing excess fuel is bypassed back to the tank. The return plug must not be reinstalled.

Bleed :
In one pipe operation, the easy flow bleeder valve must be loosened to bleed the system. Bleeding in two pipe operation is automatic, but it may be accelerated by loosening the easy flow bleeder.

PUMP IDENTIFICATION

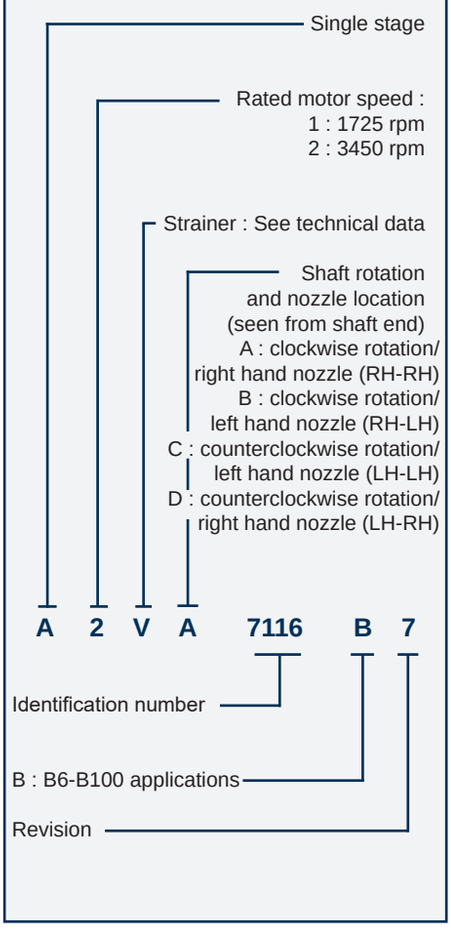

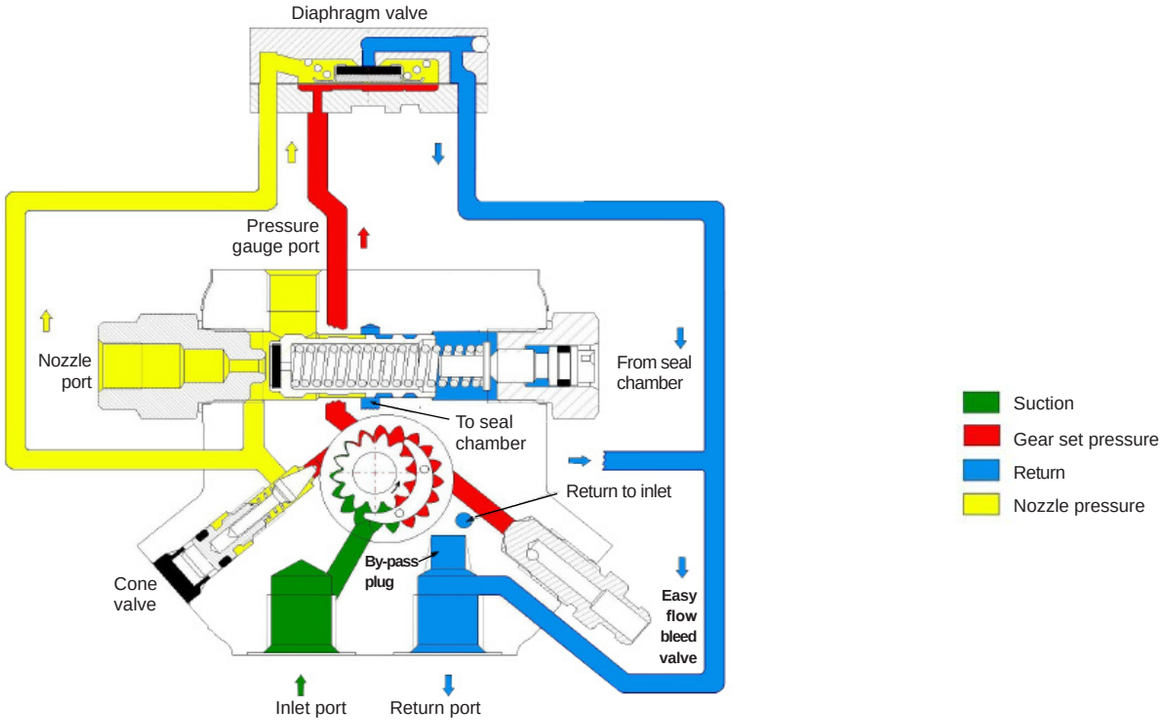

Suntec Industries Incorporated - 60 Aberdeen Drive - Glasgow, KY 42141 - USA
Tel : 270 651 7116 - www.suntecpumps.com

TECHNICAL DATA

General

Mounting	Flange mounting
Connection threads Inlet Nozzle outlet Pressure gauge port Bleeder valve port	 1/4 NPTF 1/8 NPTF 1/8 NPTF 1/8 NPTF
Valve function	Pressure regulation and cut-off
Cut-off	Motor speed dependent
Shaft	5/16 in
By-pass plug	Not inserted in return port, for one pipe system. To be inserted in return port with a 5/32 allen key for two-pipe system.

Strainer open area	V = min 3 in^2 Y = min 5 in^2 T = min 10.5 in^2
Certified	c UL us B6-B100: US only

Hydraulic data

Oil temperature	32 - 140°F
Ambient temperature	32 - 140°F
Inlet and return pressures *NFPA limits pressures to 3 psi max*	10 psi max.
Suction height	Single pipe: 6" Hg max. vacuum, Two-pipe: 12" Hg max. vacuum, to prevent air separation from oil

Ratings

Model number	Pressure range	Delivery pressure	Nozzle rating	Power consumption at delivery pressure
A2VA-7116B	100 to 200 PSI	100 PSI	3 GPH at 150 PSI / 2 GPH at 200 PSI	80 W
A2VD-7119B	100 to 200 PSI	100 PSI	3 GPH at 150 PSI / 2 GPH at 200 PSI	80 W
A2VA-7142B	100 to 200 PSI	100 PSI	3 GPH at 150 PSI	80 W
A2VA-7145B	100 to 200 PSI	145 PSI	3 GPH at 150 PSI / 2 GPH at 150 PSI	90 W
A1TD-7149B	100 to 200 PSI	100 PSI	11GPH at 100 PSI / 6 GPH at 150 PSI	75 W
A1YD-7154B	100 to 200 PSI	100 PSI	4 GPH at 100 PSI / 3 GPH at 150 PSI	60 W
A1YA-7912B	100 to 200 PSI	100 PSI	7 GPH at 100 PSI / 3 GPH at 150 PSI	60 W
A1YC-7914B	100 to 150 PSI	100 PSI	7 GPH at 100 PSI / 3 GPH at 150 PSI	60 W
A2YA-7916B	100 to 200 PSI	100 PSI	7 GPH at 150 PSI / 3 GPH at 200 PSI	80 W
A1YC-7944B	100 to 150 PSI	100 PSI	7 GPH at 100 PSI / 3 GPH at 150 PSI	60 W
A1YC-7946B	100 to 200 PSI	100 PSI	7 GPH at 150 PSI / 2 GPH at 200 PSI	170 W

PUMP DIMENSIONS *(in inches)*

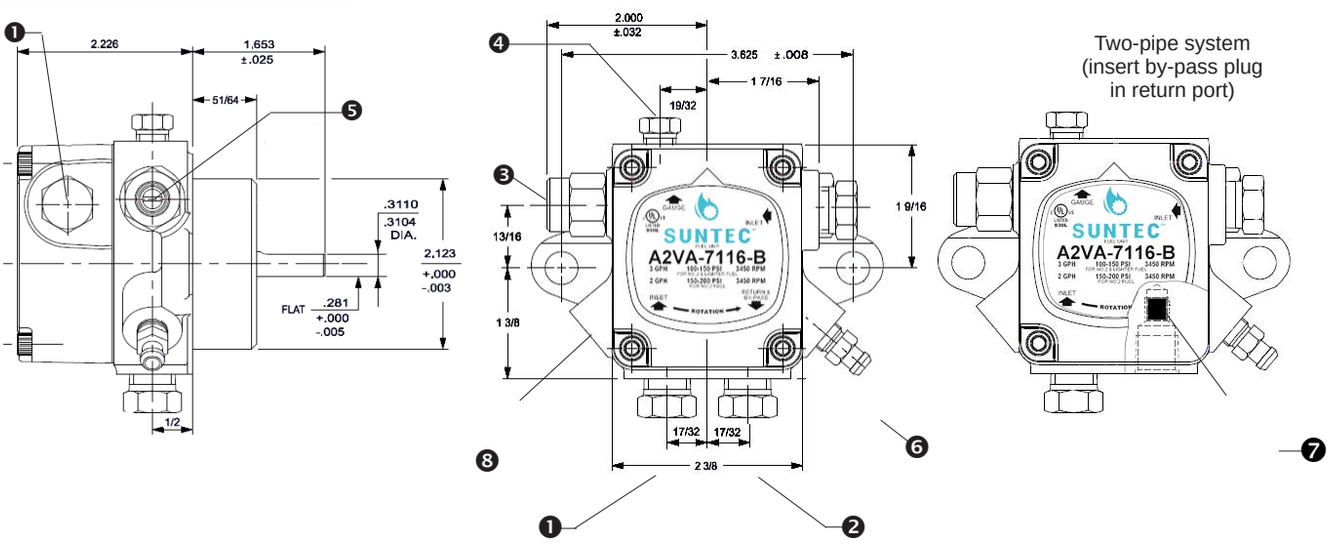

❶ Inlet ❷ Return ❸ Nozzle outlet ❹ Pressure gauge port ❺ Pressure adjustment ❻ Bleeder valve ❼ Internal by-pass plug ❽ Cone valve

SOLENOID SINGLE STAGE PUMP

A-3000B

A-3000-B - US - Ed. 3 - November 2024

SUNTEC **A-3000B** model contains a unique and hydraulic dual safety cut-on/off driven by :
- A motor speed dependent device
- A solenoid by-passing valve

Cut-on is operated when both mechanisms are released. Cut-off occurs when the speed decrease or the solenoid valve is de-energized.

This unit is supplied for 1-pipe operation, without by-pass plug installed. Please verify before installation.

COMPATIBILITY

Fuel oil #2 and lighter, B6-B100 (blends from 6% up to 100% biodiesel, per ASTM D396).

PUMP OPERATING PRINCIPLE

As the motor starts, the fuel from the gearset flowing through the cone valve creates a pressure drop across the diaphragm valve. When the pressure difference is sufficient to overcome the spring force, the diaphragm valve closes and the fuel is routed to the piston chamber.
If the solenoid valve (Normally Open) is :

- Opened (de-energized), the fuel flows through the by-pass channel, no pressure will then be built up. The piston will not release the fuel flow through the nozzle.
- Closed (energized) and the diaphragm valve is closed, the pressure is built up causing the piston to open and the fuel flow through the nozzle.

The piston spring is adjusted such that a given nozzle pressure can be maintained while any resulting excess fuel is dumped.
When the solenoid valve is open (de-energized), the valve opens, closing the piston at full operating speed, shutting fuel off the nozzle.

One pipe installation :
The by-pass plug must not be installed. The excess fuel is returned back to the inlet.

Two pipe installation :
The steel plug of the return port must be removed and the by-pass plug must be inserted in the return port allowing excess fuel is bypassed back to the tank. The return plug must not be reinstalled.

Bleed :
In one pipe operation, the easy flow bleeder valve must be loosened to bleed the system. Bleeding in two pipe operation is automatic, but it may be accelerated by loosening the easy flow bleeder.

PUMP IDENTIFICATION

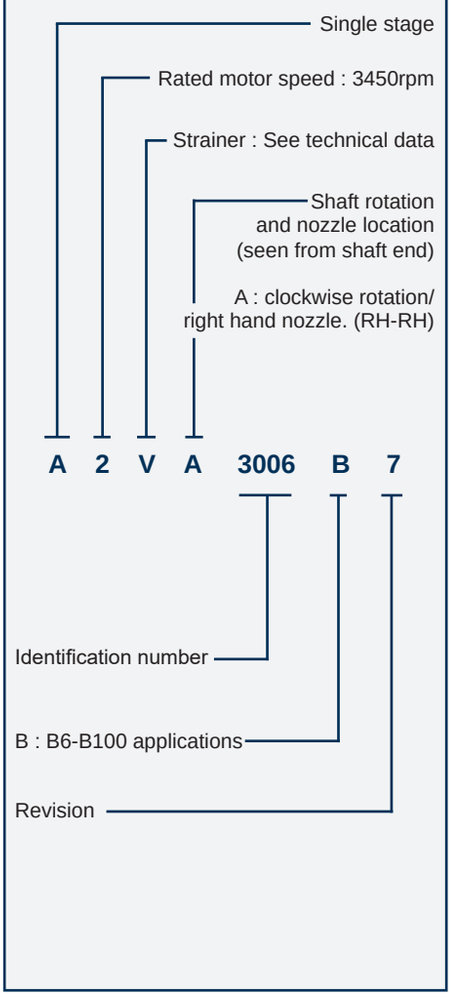

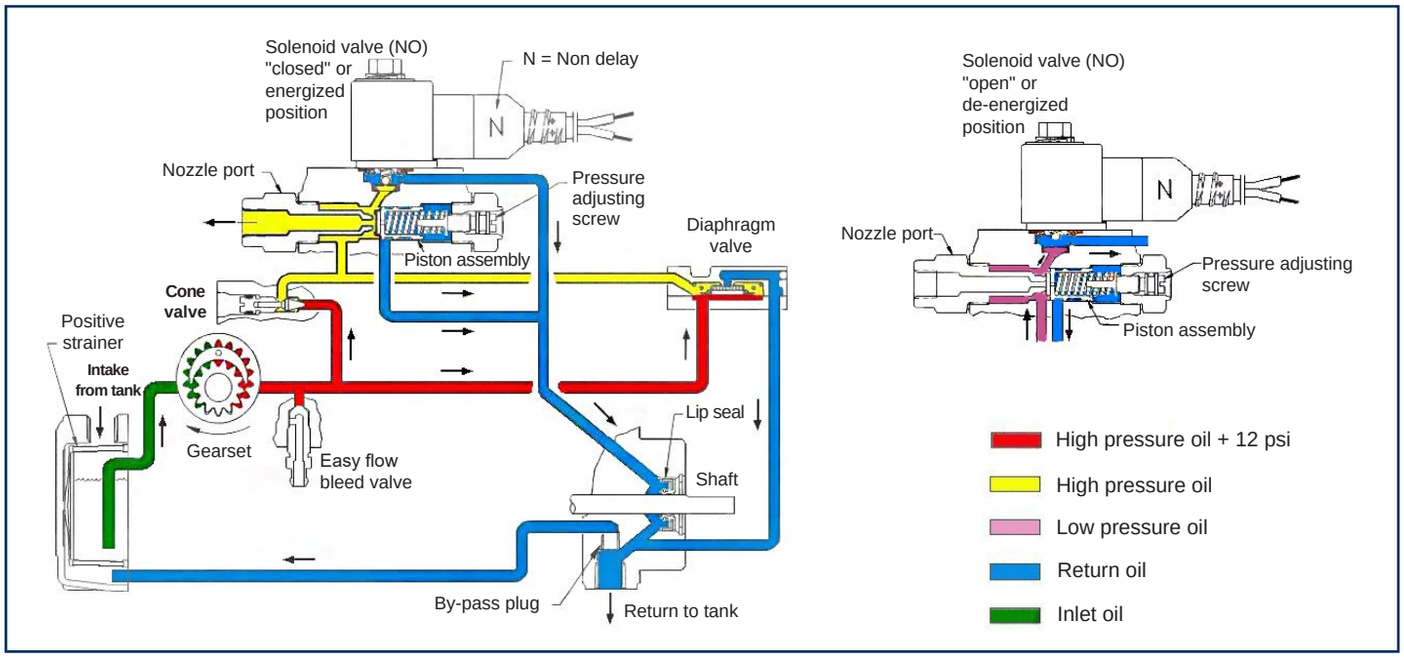

Suntec Industries Incorporated - 60 Aberdeen Drive - Glasgow, KY 42141 - USA
Tel : 270 651 7116 - www.suntecpumps.com

TECHNICAL DATA

General

Mounting	Flange mounting
Connection threads Inlet and return Nozzle outlet Pressure gauge port Bleeder valve port	 1/4 NPTF 1/8 NPTF (model 3006B) 3/8x45° flare tube fitting (model 3106B) 1/8 NPTF 1/8 NPTF
Valve function	Pressure regulation and cut-off (cut-off only assured for specified pressure range)
Cut-off	Motor speed dependent and solenoid
Strainer open area	Min 3 in^2
Shaft	5/16 in
By-pass plug	Not inserted in return port, for one pipe system.To be inserted in return port with a 5/32 allen key for two-pipe system.
Certified	B6-B100: US only

Hydraulic data

Nozzle pressure range	100 - 200 psi
Delivery pressure setting	100 psi
Rated nozzle flow	4 GPH @100 psi, 3450 rpm 3 GPH @200 psi, 3450 rpm
Oil temperature	32 - 140°F
Ambient temperature	32 - 140°F
Inlet and return pressures *NFPA limits pressures to 3 psi max*	10 psi max.
Suction height	Single pipe : 6" Hg max. vacuum, Two-pipe : 12" Hg max. vacuum, to prevent air separation from oil
Power consumption	80 W @100 psi

Solenoid valve characteristics

Frenquency	50/60 Hz
Consumption	9 W
Maximum pressure	300 psi

Solenoid coil number system

N 6 2 1 L

CORDSET TYPE
N - NON DELAY
X - NO CORDSET

COIL VOLTAGE
2 - 12 VDC/24 VAC
6 - 115 VAC
7 - 220 VAC

R - R.H LEADS
L - L.H LEADS
(From shaft end)

LEADS LENGHTS
X1 - NO CORDSET
21 - 13 INCH (PARTIAL JACKET)
42, 53, 61 - 22.5 INCH (NO JACKET)

PUMP DIMENSIONS *(in inches)*

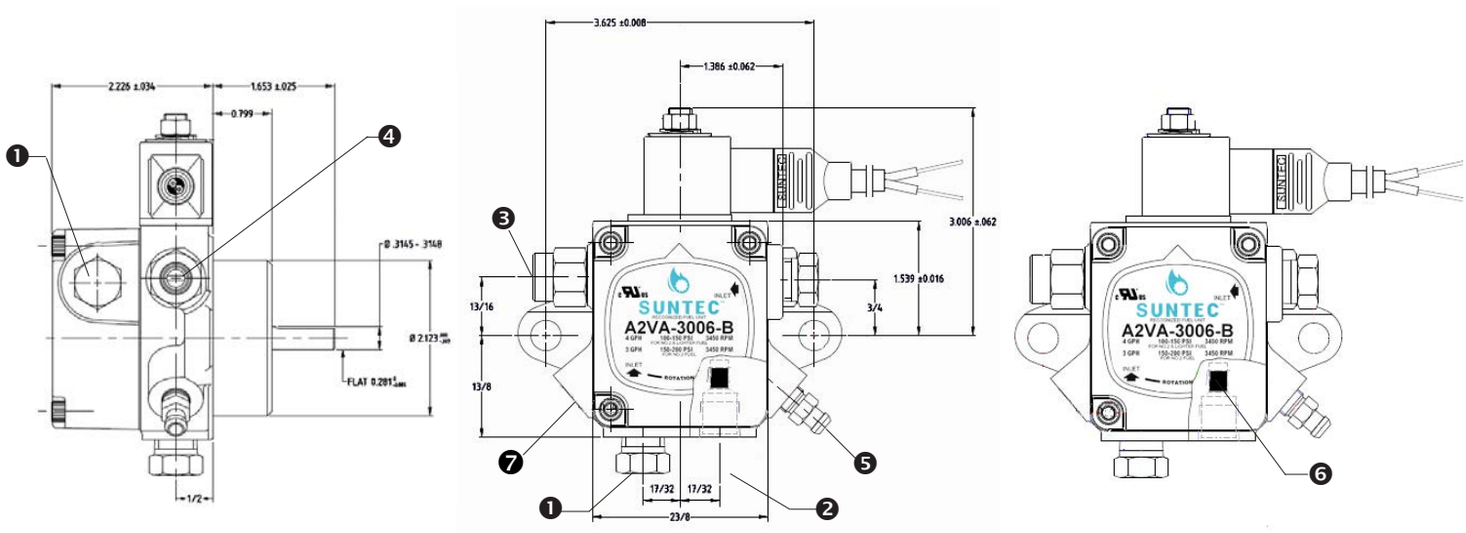

❶ Inlet ❷ Return ❸ Nozzle outlet ❹ Pressure adjustment ❺ Bleeder valve ❻ Internal by-pass plug ❼ Cone valve

SUNTEC™

SOLENOID SINGLE STEP PUMP

OL

OL - US - Ed. 7 - November 2024

The SUNTEC **OL** oil pump incorporates a blocking solenoid valve with in-line cut-off function.

COMPATIBILITY

- Fuel oil #2 and lighter, special "V" models for B6-B100 (blends from 6% up to 100% biodiesel, per ASTM D396) and "K" models for Kerosene.
- One or two-pipe system.

PUMP OPERATING PRINCIPLE

The gear set draws oil from the tank through the built-in filter and transfers it to the nozzle line via the cut-off solenoid valve . A pressure regulating valve is used to by-pass all oil which is not required at the nozzle.

One-pipe installation

The oil which does not go through the nozzle line is returned directly to the gear inlet and the suction line flow is equal to the nozzle flow. In that case, the by-pass plug must be removed from the return port, and the return port sealed by steel plug and washer.

Two-pipe operation

The by-pass plug is fitted in the return port, which ensures that the oil by-passed by the regulating valve is returned to the tank and the suction line flow is equal to the gear set capacity.

Cut-off

The solenoid valve of the OL pump is of the "normally closed" type and is situated in the nozzle line. This design ensures extremely fast response and the switching can be selected according to the burner operating sequence and is independent of motor speed.

When the solenoid is :

- non-activated, the valve is closed and all oil pressurized by the gear set passes through the regulator to suction or the return line, depending upon pipe arrangement.
- activated, oil passes to the nozzle line at the pressure set by the pressure regulating valve.

Bleed

In one-pipe operation, the bleeder valve must be loosened (or a pressure port must be opened) until the air is evacuated from the system.

Bleeding in two-pipe operation is automatic : it is assured by a bleed flat on the piston.

PUMP IDENTIFICATION

(Not all model combinations are available Consult your Suntec representative)

OL: pressure regulation and blocking solenoid valve with in-line cut-off function

V : B6-B100 applications

Gear set capacity (see pump capacity curves)

Shaft rotation and nozzle location (seen from shaft end)
A: clockwise rotation/ right hand nozzle.
B: clockwise rotation/ left hand nozzle.
C: anti-clockwise rotation left hand nozzle.
D: anti-clockwise rotation right hand nozzle.

K: kerosene applications

Pump series

1: conical thread
4,5,6 : cylindrical thread

Model number

OL V 35 C K 9 1 xx 1 P 06

Revision number

Installation

P : by-pass plug inserted in return port for two-pipe operation
M : without by-pass plug, return plugged, for one-pipe operation

Solenoid valve voltage
02 : 24 V AC
06 : 110-120 V AC
05 : 220-240 V AC

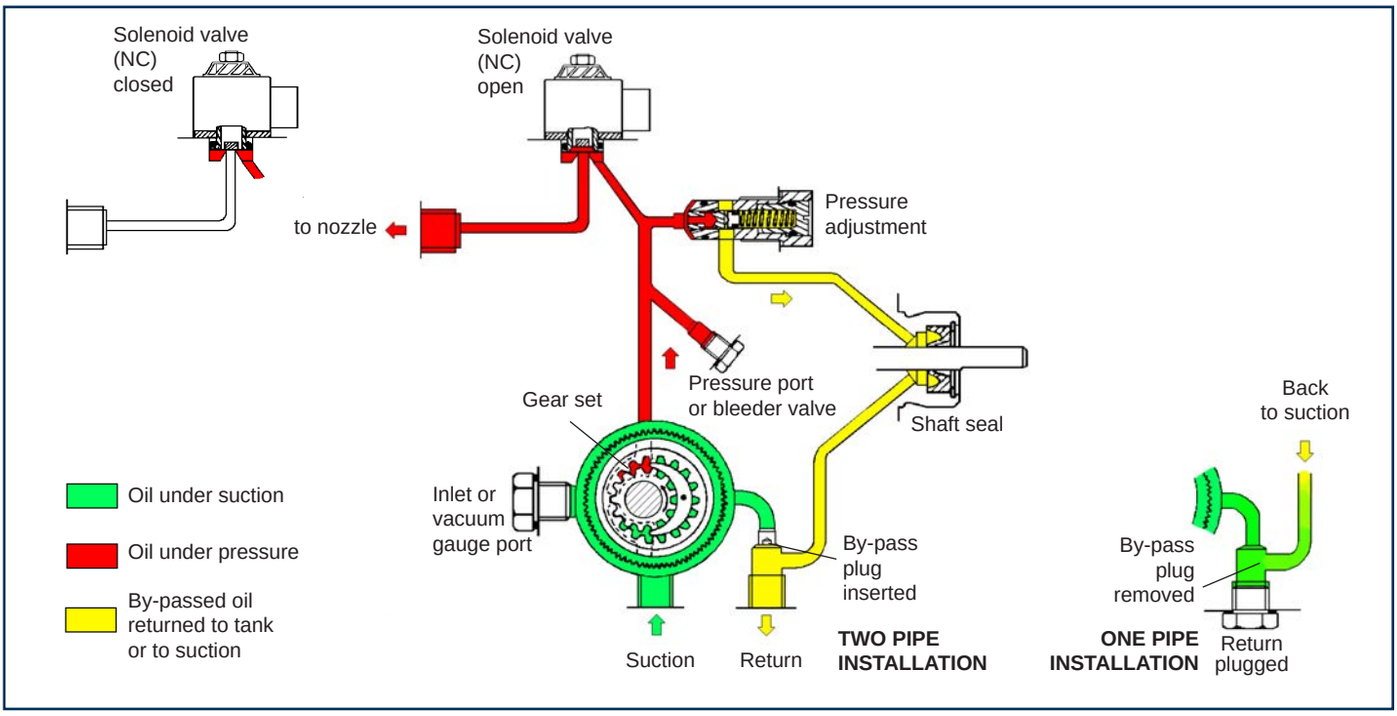

Suntec Industries Incorporated - 60 Aberdeen Drive - Glasgow, KY 42141 - USA
Tel : 270 651 7116 - www.suntecpumps.com

TECHNICAL DATA

General

Mounting	Flange mounting *Hub mounting available for OL 35/55/65*	
Connection threads Suction and return Nozzle outlet Pressure gauge port Vacuum gauge	Conical : 1/4 NPTF 1/8 NPTF 1/8 NPTF 1/4 NPTF	Cylindrical (according to ISO 228/1) : G 1/4 G 1/8 G 1/8 G 1/8
Valve function	Pressure regulation	
Strainer	Open area : Opening size :	0,93 in² 5.90 mil
Shaft	5/16 " dia.	
By -pass plug	Inserted in return port for 2 pipe system; to be removed with a 3/16" Allen key for 1 pipe system.	
Weight	3.44 lBs	
Certification	c UL us	B6-B100 : US only

Hydraulic data

Gear size	Nozzle pressure range	Factory setting*
35/55 65/95	60 - 260 or 120 - 210 psi @5 cSt 145 - 175 psi @5 cSt	200 or 175 psi 175 psi
35K/55K/65K (Kerosene models)	120 - 210 psi @ 1,8 cSt	175 psi
**other ranges available on request, refer to the specified range of the particular fuel unit.*		
Operating viscosity	2 -12 cSt for OL 35/55/65/95 1.25 - 12 cSt for OL 35K/55K/65K	
Oil temperature	32 - 140°F in the pump	
Ambient temperature	32 - 140°F	
Inlet and return pressures *NFPA limits pressures to 3 psi max*	10 psi max.	
Suction height	Single pipe : 6" Hg max. vacuum, Two-pipe : 12" Hg max. vacuum, to prevent air separation from oil	
Rated speed	3600 rpm max.	
Torque (@ 45 rpm)	0.88 lb.in (OL 35/35K/55/55K) 1.06 lb.in (OL 65/65K)	

Solenoid valve characteristics

Frequency	50/60 Hz
Consumption	9 W
Maximum pressure	300 psi

Pump capacity

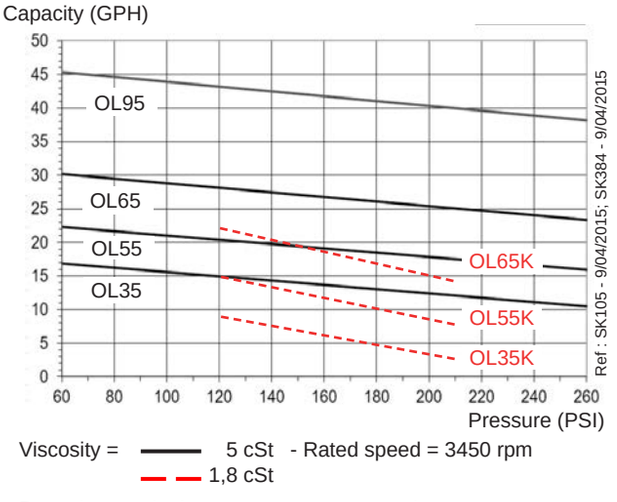

Viscosity = ——— 5 cSt - Rated speed = 3450 rpm
– – – 1,8 cSt

Data shown take into account a wear margin.
Do not oversize the pump when selecting the gear capacity.

Power consumption

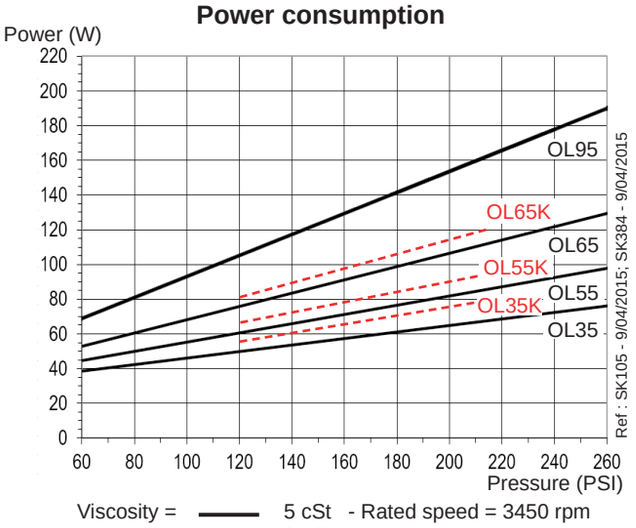

Viscosity = ——— 5 cSt - Rated speed = 3450 rpm
– – – 1,8 cSt

PUMP DIMENSIONS *(in inches)*

Example shows "A" rotation and nozzle outlet

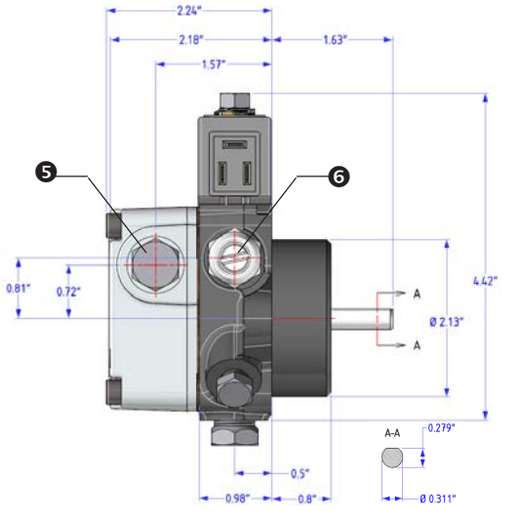

Pump revision1 - Flange mounting

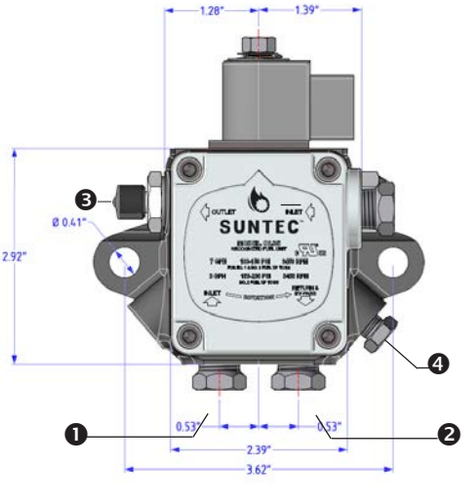

Pump revision 4 - hub mounting

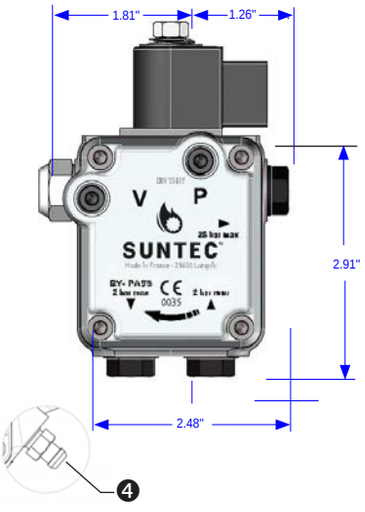

❶ Suction
❷ Return and internal by-pass plug
❸ Nozzle outlet
❹ Pressure gauge port or bleeder valve
❺ Inlet or vacuum gauge port
❻ Pressure adjustment

SOLENOID TWO STEP PUMP

OT2

OT2 - US - Ed. 3 - November 2024

This SUNTEC **OT2** oil pump features 2 mode pressure operation and incorporates a blocking solenoid valve with in-line cut-off function. Switching between low and high modes is assured by a 2nd integral solenoid valve.

COMPATIBILITY

- Fuel oil #2 and lighter, special "V" models for B6-B100, (blends from 6% up to 100% biodiesel, per ASTM D396) and for Kerosene use, please contact SUNTEC.
- Two firing rates (with a single nozzle line).
- One or two-pipe system.

PUMP OPERATING PRINCIPLE

The gear set draws oil from the tank through the built-in filter and transfers it to the nozzle line via the cut-off solenoid valve. Pressure regulation is assured by two spool valves, one for each pressure mode.

Switching between low and high pressure is assured by a "normally open" by-pass solenoid valve. When this solenoid is non-activated, a by-pass channel is open, allowing the normal functionning of the low pressure regulating valve which sets the nozzle pressure. When this solenoid is activated, the by-pass channel is closed, thus pressure will build up on both sides of the low pressure regulating valve eliminating its effect, and the high pressure regulating valve now determines the nozzle pressure.

Cut-off

The blocking solenoid valve of the nozzle line is of the "normally closed" type.
This design ensures extremely fast response and the switching can be selected according to the burner operating sequence and is independant of motor speed.
When this solenoid valve is :
- non-activated, the valve is closed and all oil pressurised by the gear set passes through the regulators to suction or to the return line, depending upon pipe arrangement.
- activated, oil passes to the nozzle line at the pressure set by the pressure regulating valves.

In two pipe, the by-pass plug must be fitted in the return port, which ensures that the oil dumped by the regulating valves is returned to the tank and the suction line flow is equal to the gear set capacity. Bleeding in two pipe operation is automatic (it is assured by a bleed flat on the piston of the low pressure regulator), but it may be accelerated by loosening the bleeder valve (or opening a pressure port) until the air is evacuated from the system.

In one pipe, the by-pass plug must be removed, and the return plugged. Oil which is not required at the nozzle is returned directly to the gear inlet via the pressure regulating valves, and the suction line flow is equal to the nozzle flow. The bleeder valve must be loosened (or a pressure port must be opened) to bleed the system.

PUMP IDENTIFICATION

(Not all model combinations are available Consult your Suntec representative)

OT2 : Pump for two mode operation (one nozzle line and two pressure modes) with integral in-line solenoid cut-off

V : B6-B100 applications

Gear set capacity (see pump capacity curve)

Shaft rotation and nozzle location (seen from shaft end)
A: clockwise rotation/ right hand nozzle.
B: clockwise rotation/ left hand nozzle.
C:anti-clockwise rotation left hand nozzle.
D:anti-clockwise rotation right hand nozzle.

Pump series

1: conical thread
6 : cylindrical thread

Model number

OT2 V 45 A 9 1 xx 1 P 06

Revision number

Installation
P : by-pass plug inserted in return port for two-pipe operation
M : without by-pass plug,return plugged, for one-pipe operation

Solenoid valve voltage
02 : 24 V AC
06 : 110-120 V AC
05 : 220-240 V AC

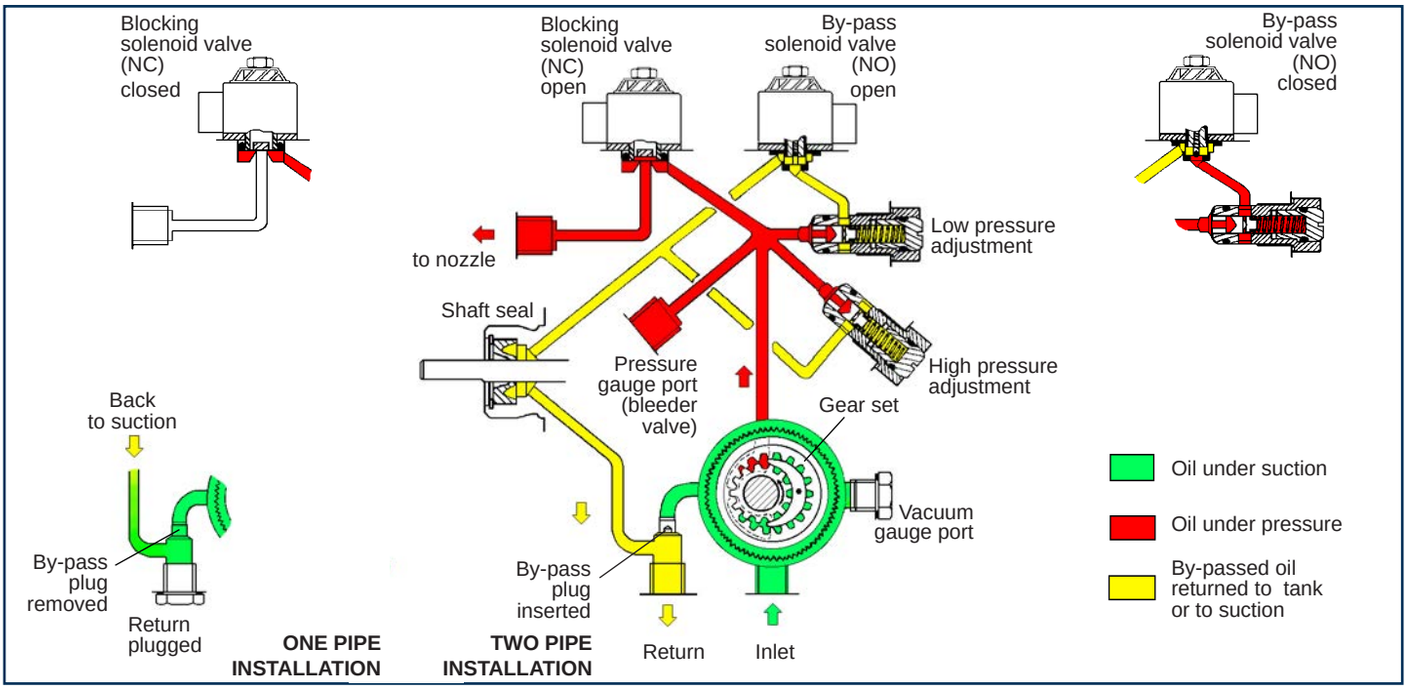

Suntec Industries Incorporated - 60 Aberdeen Drive - Glasgow, KY 42141 - USA
Tel : 270 651 7116 - www.suntecpumps.com

TECHNICAL DATA

General

Mounting	Flange mounting	
Connection threads Inlet and return Nozzle outlet Pressure gauge port Vacuum gauge	 1/4 NPTF 1/8 NPTF 1/8 NPTF 1/4 NPTF	
Valve function	Pressure regulation	
Strainer	Open area : Opening size :	0,93 in² 5.90 mil
Shaft	5/16 " dia.	
By -pass plug	Inserted in return port for 2 pipe system; to be removed with a 5/32" Allen key for 1 pipe system.	
Weight	3.44 lBs	
Certification	c UL us	B6-B100: US only

Hydraulic data

Nozzle pressure range @ 5 cSt	Low mode : 120 - 210 psi High mode : 175 - 360 psi
Factory setting* @ 5 cSt	Low mode : 130 psi High mode : 320 psi
** other ranges (and factory settings) available on request, refer to the specified range of the particular fuel unit.*	
Operating viscosity	2 -12 cSt (for Kerosene use, please contact SUNTEC)
Oil temperature	32 - 140°F in the pump
Ambient temperature	32 - 140°F
Suction height	Single pipe : 6" Hg max. vacuum, Two-pipe : 12" Hg max. vacuum, to prevent air separation from oil
Inlet and return pressures *NFPA limits inlet pressure to 3 psi max*	10 psi max.
Rated speed	3600 rpm max.
Torque (@ 45 rpm)	0.88 lb.in (OT2 45/55) 1.06 lb.in (OT2 65)

Solenoid valve characteristics

Frequency	50/60 Hz
Consumption	9 W
Maximum pressure	360 psi
Although pressure adjustment may permit to develop pressure beyond maximum pressure of solenoid valve, pressure should not be adjusted above this value	

Pump capacity

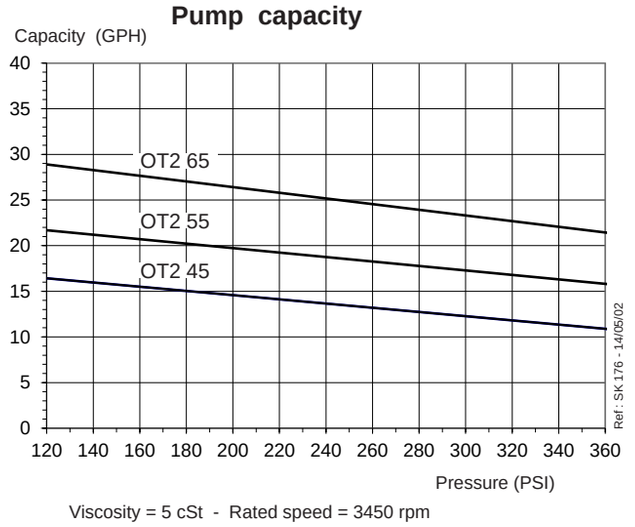

Viscosity = 5 cSt - Rated speed = 3450 rpm

Data shown take into account a wear margin.
Do not oversize the pump when selecting the gear capacity to ensure the optimum operation of the (NO) solenoid valve (switching low/high mode).

Power consumption

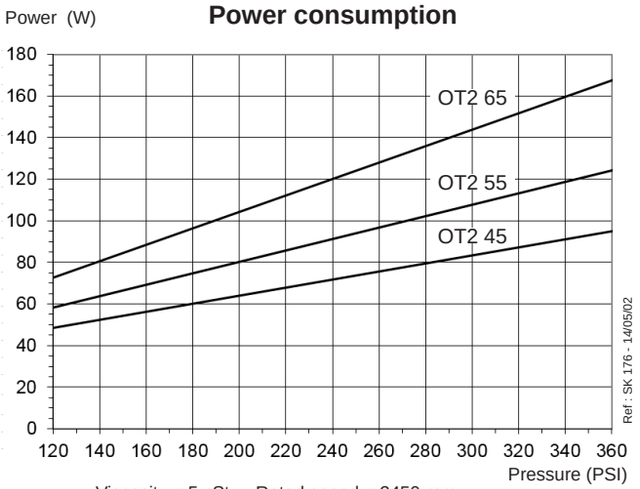

Viscosity = 5 cSt - Rated speed = 3450 rpm

PUMP DIMENSIONS *(in inches)*

Example shows "A" rotation and nozzle outlet

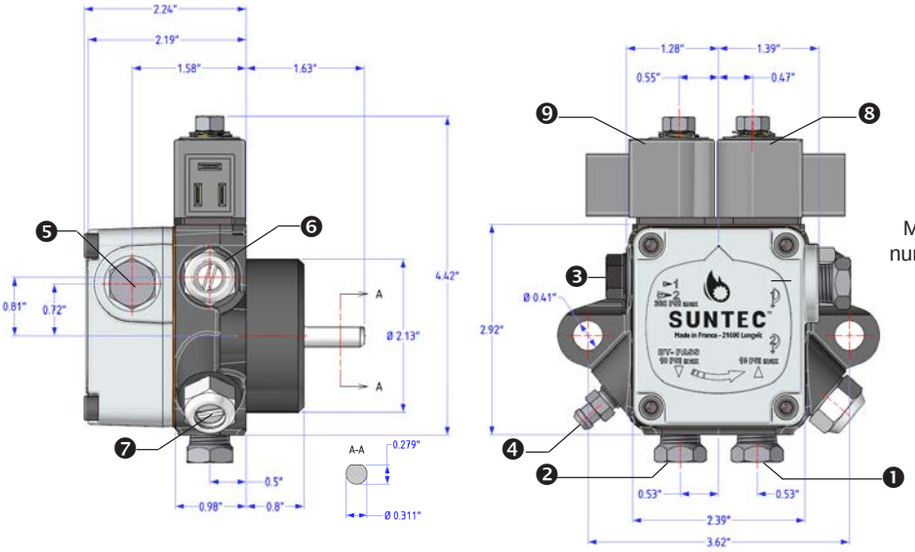

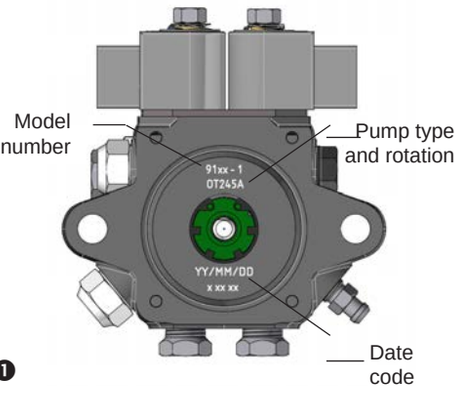

❶ Suction
❷ Return and internal by-pass plug
❸ Nozzle outlet
❹ Bleeder valve (Pressure gauge port)
❺ Vacuum gauge port
❻ Low pressure adjustment
❼ High pressure adjustment
❽ Solenoid valve for switching low/high modes
❾ Blocking solenoid valve

B100 MEDIUM CAPACITY

SUNTEC™

TWO STAGE PUMP

B-8000B

B-8000B - US - Ed. 3 - November 2024

SUNTEC B-8000B model contains a unique and hydraulic safety cut-on/off, driven by a motor speed dependent device, and a high single pipe lift capacity. The first stage gear set sucks the fuel from the line, and the second stage gear set pressurizes the fuel.
This unit is supplied for 1-pipe operation, without by-pass plug installed. Please verify before installation.

COMPATIBILITY

Fuel oil #2 and lighter, B6-B100 (blends from 6% up to 100% biodiesel, per ASTM D396).

PUMP OPERATING PRINCIPLE

As the motor starts, the fuel from the second stage gearset flowing through the cone valve creates a pressure drop across the diaphragm valve. When the pressure difference is sufficient to overcome the spring force, the diaphragm valve closes and the pressure is built up causing the piston to open and the fuel flow through the nozzle port.
The piston spring is adjusted such that a given nozzle pressure can be maintained while any resulting excess fuel is dumped.
Cut-off speed is factory set so that the cone valve gives the necessary pressure drop to open the diaphragm valve. This in turn reduces the piston chamber pressure and the piston shuts off the nozzle.

One pipe installation :
The by-pass plug must not be installed. The excess fuel is returned back to the inlet.

Two pipe installation :
The steel plug of the return port must be removed and the by-pass plug must be inserted in the return port allowing excess fuel is bypassed back to the tank. The return plug must not be reinstalled.

Bleed :
In one pipe operation, the easy flow bleeder valve must be loosened to bleed the system. Bleeding in two pipe operation is automatic, but it may be accelerated by loosening the easy flow bleeder.

PUMP IDENTIFICATION

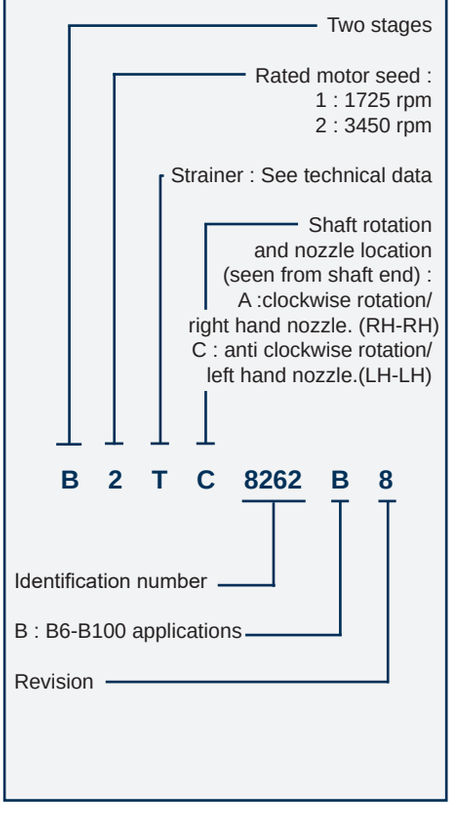

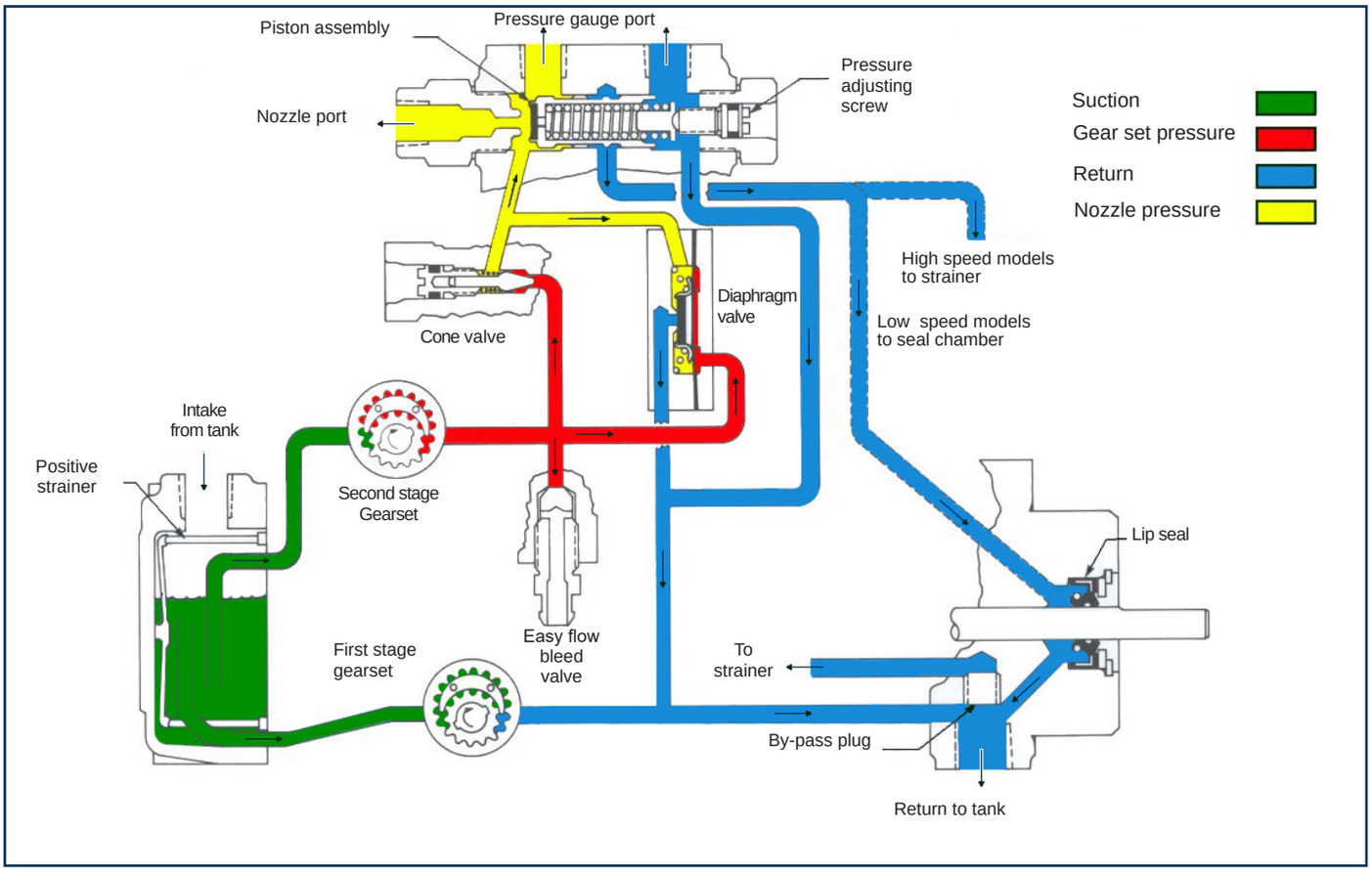

Suntec Industries Incorporated - 60 Aberdeen Drive - Glasgow, KY 42141 - USA
Tel : 270 651 7116 - www.suntecpumps.com

TECHNICAL DATA

General

Mounting	Flange mounting
Connection threads Inlet Nozzle outlet Pressure gauge port Bleeder valve port	 1/4 NPTF 1/8 NPTF 1/8 NPTF 1/8 NPTF
Valve function	Pressure regulation and cut-off
Cut-off	Motor speed dependent
Shaft	5/16 in
By-pass plug	Not inserted in return port, for one pipe system. To be inserted in return port with a 5/32 Allen key for two-pipe system
Strainer open area	V = min 3 in^2 Y = min 5 in^2 T = min 10.5 in^2
Certified	c UL us B6-B100: US only except B2VA-8241B

Hydraulic data

Oil temperature	32 - 140°F
Ambiant temperature	32 - 140°F
Inlet and return pressures *NFPA limits pressures to 3 psi max*	10 psi max.
Suction height	Single pipe: 6" Hg max. vacuum, Two-pipe: 17" Hg max. vacuum, to prevent air separation from oil

Nozzle rating

Model number	Pressure range	Delivery pressure	Nozzle rating	Power consumption at delivery pressure
B1VA-8212B	100 to 150 PSI	100 PSI	3 GPH at 100 PSI	80W
B2VA-8241B	10 to 20 PSI	20 PSI	20 GPH at 20 PSI	60W
B2TA-8248B	100 to 150 PSI	100 PSI	8 GPH at 150 PSI	100W
B2TA-8260B	100 to 200 PSI	100 PSI	23 GPH at 100 PSI / 15 GPH at 200 PSI	130W
B2TC-8262B	100 to 200 PSI	100 PSI	23 GPH at 100 PSI / 15 GPH at 200 PSI	130W
B2YA-8916B	100 to 200 PSI	100 PSI	7 GPH at 150 PSI / 3 GPH at 200 PSI	100W

PUMP DIMENSIONS *(in inches)*

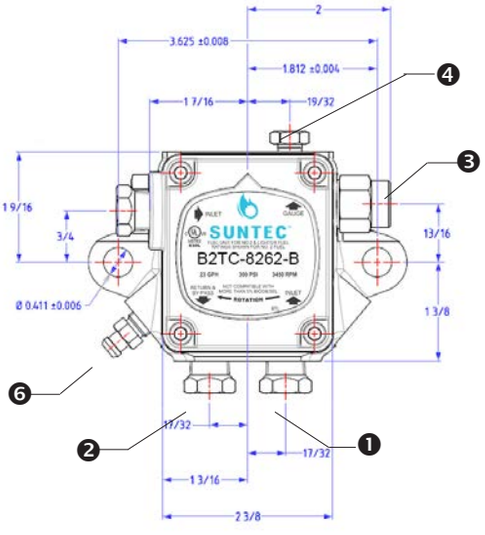

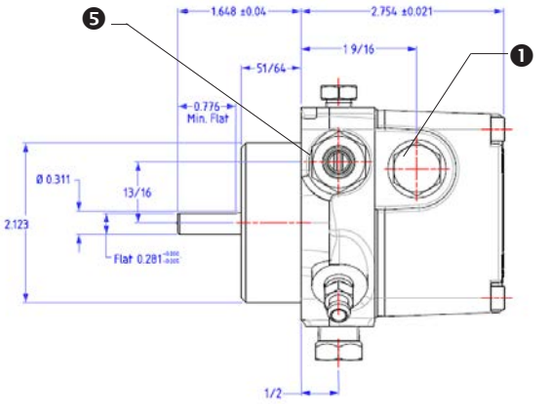

Two-pipe system
(by-pass plug inserted
in return port)

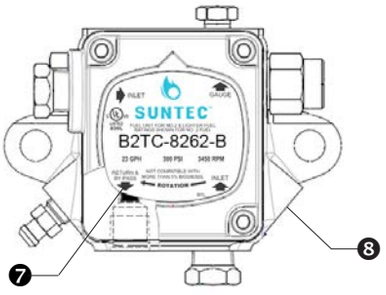

❶ Inlet ❷ Return ❸ Nozzle outlet ❹ Pressure gauge port
❺ Pressure adjustment ❻ Bleeder valve ❼ Internal by-pass plug ❽ Cone valve

SUNTEC™

TWO STAGE PUMP
HIGH PRESSURE

B-8000B
High Pressure

B-8000B - HP - US - Ed. 3 - November 2024

SUNTEC B-8000B high pressure model contains two gear sets. The first stage gear set sucks the fuel from the line, and the second stage gear set pressurizes the fuel.
This unit is supplied for 1-pipe operation, without by-pass plug installed. Please verify before installation.

COMPATIBILITY

Fuel oil #2 and lighter, B6-B100 (blends from 6% up to 100% biodiesel, per ASTM D396).

PUMP OPERATING PRINCIPLE

For B2TC-8931B operating principle, please refer to B-8000B datasheet.

As the motor starts, the fuel from the second stage gearset flow through the valve that builds up the oil pressure to the nozzle line.
All oil which does not go through the nozzle line will be by-passed through the valve back to the gear-set in a one-pipe installation, or to the return line in a two pipe installation.

Cut-on/off is handled differently depending on model (please see table on page 2) :

- No cut-off: Cut-off must be provided by an external solenoid valve.
- Hydraulic safety cut-off fitted to the pressure regulating valve: When the pressure difference is sufficient to overcome the spring force, the valve opens and releases the flow to the nozzle port.

During the stop sequence, the gear-set speed slows down and the valve closes when the gear-set capacity is not sufficient to build the pressure anymore.

One pipe installation :
The by-pass plug must not be installed. The excess fuel is returned back to the inlet.

PUMP IDENTIFICATION

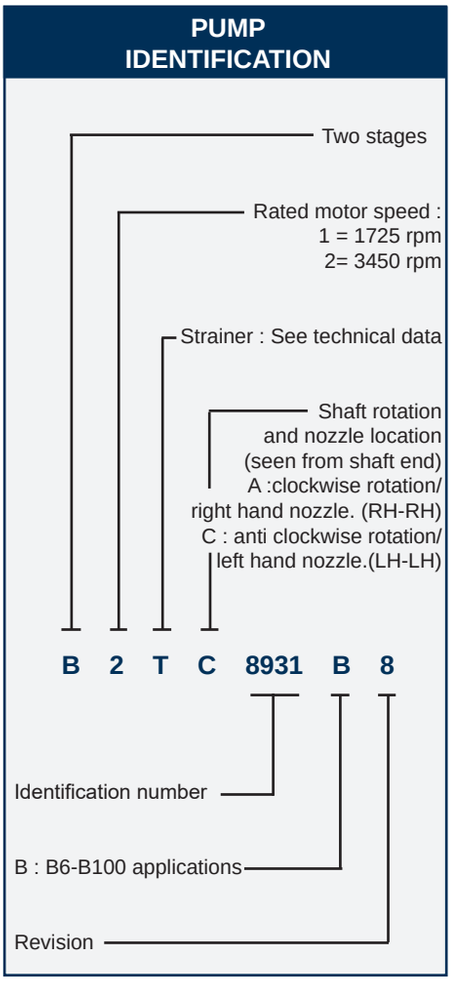

Two pipe installation :
The steel plug of the return port must be removed and the by-pass plug must be inserted in the return port allowing excess fuel is bypassed back to the tank. The return plug must not be reinstalled.

Bleed :
In one pipe operation, the easy flow bleeder valve must be loosened to bleed the system. Bleeding in two pipe operation is automatic, but it may be accelerated by loosening the easy flow bleeder.

TECHNICAL DATA

General

Mounting	Flange mounting
Connection threads Inlet Nozzle outlet Pressure gauge port Bleeder valve port	 1/4 NPTF 1/8 NPTF 1/8 NPTF 1/8 NPTF
Valve function	Pressure regulation and cut-off
Shaft	5/16 in
By-pass plug	Not inserted in return port, for one pipe system. To be inserted in return port with a 5/32 Allen key for two-pipe system
Strainer open area	T = min 10.5 in^2
Certified	c UL us B6-B100: US only

Hydraulic data

Nozzle pressure range	200 - 300 psi
Oil temperature	32 - 140°F
Ambiant temperature	32 - 140°F
Inlet and return pressures *NFPA limits pressures to 3 psi max*	10 psi max.
Suction height	Single pipe: 6" Hg max. vacuum, Two-pipe: 17" Hg max. vacuum, to prevent air separation from oil

Ratings

Model number	Cut-off mechanism	Delivery pressure	Nozzle rating	Power consumption at delivery pressure
B2TA-8245B	Hydraulic	300 PSI	16 GPH at 300 PSI	285 W
B2TA-8249B	No cut-off	300 PSI	16 GPH at 300 PSI (3450rpm) / 18 GPH at 150 PSI (2850rpm)	285 W
B2TA-8930B	No cut-off	300 PSI	23 GPH at 300 PSI (3450rpm) / 25 GPH at 150 PSI (2850rpm)	330 W
B2TC-8931B	Hydraulic motor speed dependent	300 PSI	23 GPH at 300 PSI	330 W

PUMP DIMENSIONS *(in inches)*

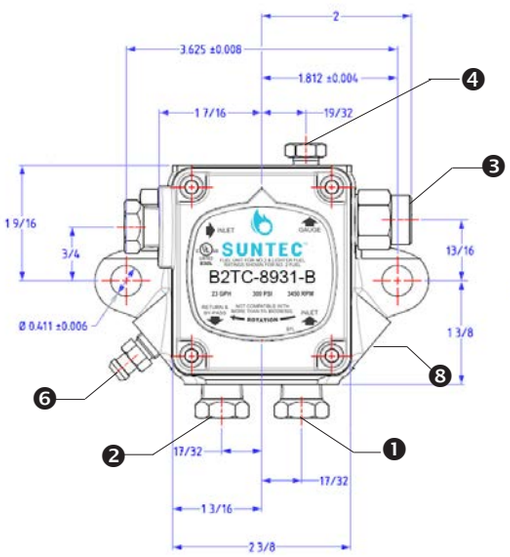

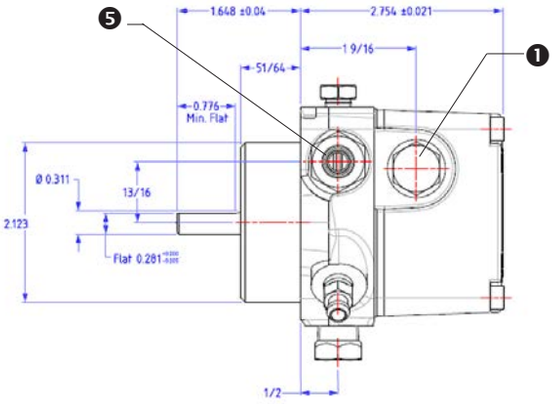

Two-pipe system
(by-pass plug inserted
in return port)

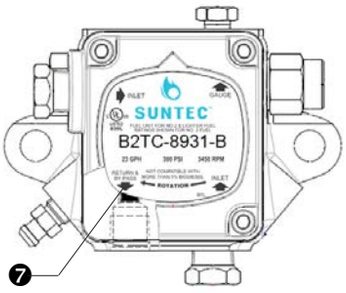

❶ Inlet
❷ Return
❸ Nozzle outlet
❹ Pressure gauge port
❺ Pressure adjustment
❻ Bleeder valve
❼ Internal by-pass plug
❽ Cone valve (8931 pump only)

SUNTEC™

SOLENOID TWO STAGE PUMP

B-4000B

B-4000B - US - Ed. 3 - November 2024

SUNTEC **B-4000B** model contains a high single pipe lift capacity and a unique hydraulic dual safety cut-on/off driven by :
- A motor speed dependent device
- A solenoid by-passing valve

Cut-on is operated when both mechanisms are released. Cut-off occurs when the speed decrease or the solenoid valve is de-energized.
The first stage gear set sucks the fuel from the line, and the second stage gear set pressurizes the fuel.
This unit is supplied for 1-pipe operation, without by-pass plug installed. Please verify before installation.

COMPATIBILITY

Fuel oil #2 and lighter, B6-B100 (blends from 6% up to 100% biodiesel, per ASTM D396).

PUMP OPERATING PRINCIPLE

As the motor starts, the fuel from the second stage gearset flowing through the cone valve creates a pressure drop across the diaphragm valve. When the pressure difference is sufficient to overcome the spring force, the diaphragm valve closes and the fuel is routed to the piston chamber.
If the solenoid valve (Normally Open) is :

- Opened (de-energized), the fuel flows through the by-pass channel, no pressure will then be built up. The piston will not release the fuel flow through the nozzle.
- Closed (energized) and the diaphragm valve is closed, the pressure is built up causing the piston to open and the fuel flow through the nozzle.

The piston spring is adjusted such that a given nozzle pressure can be maintained while any resulting excess fuel is dumped.
When the solenoid valve is open (de-energized), the valve opens, closing the piston at full operating speed, shutting fuel off the nozzle.

One pipe installation :

The by-pass plug must not be installed. The excess fuel is returned back to the inlet.

Two pipe installation :

The steel plug of the return port must be removed and the by-pass plug must be inserted in the return port allowing excess fuel is bypassed back to the tank. The return plug must not be reinstalled.

Bleed :
In one pipe operation, the easy flow bleeder valve must be loosened to bleed the system. Bleeding in two pipe operation is automatic, but it may be accelerated by loosening the easy flow bleeder.

PUMP IDENTIFICATION

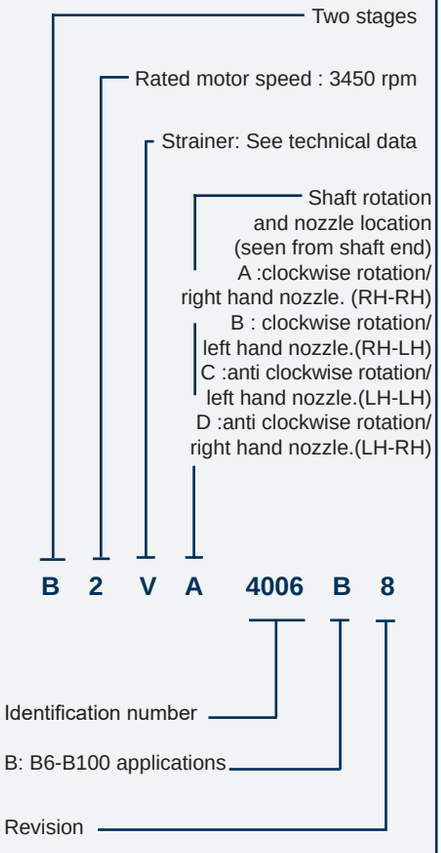

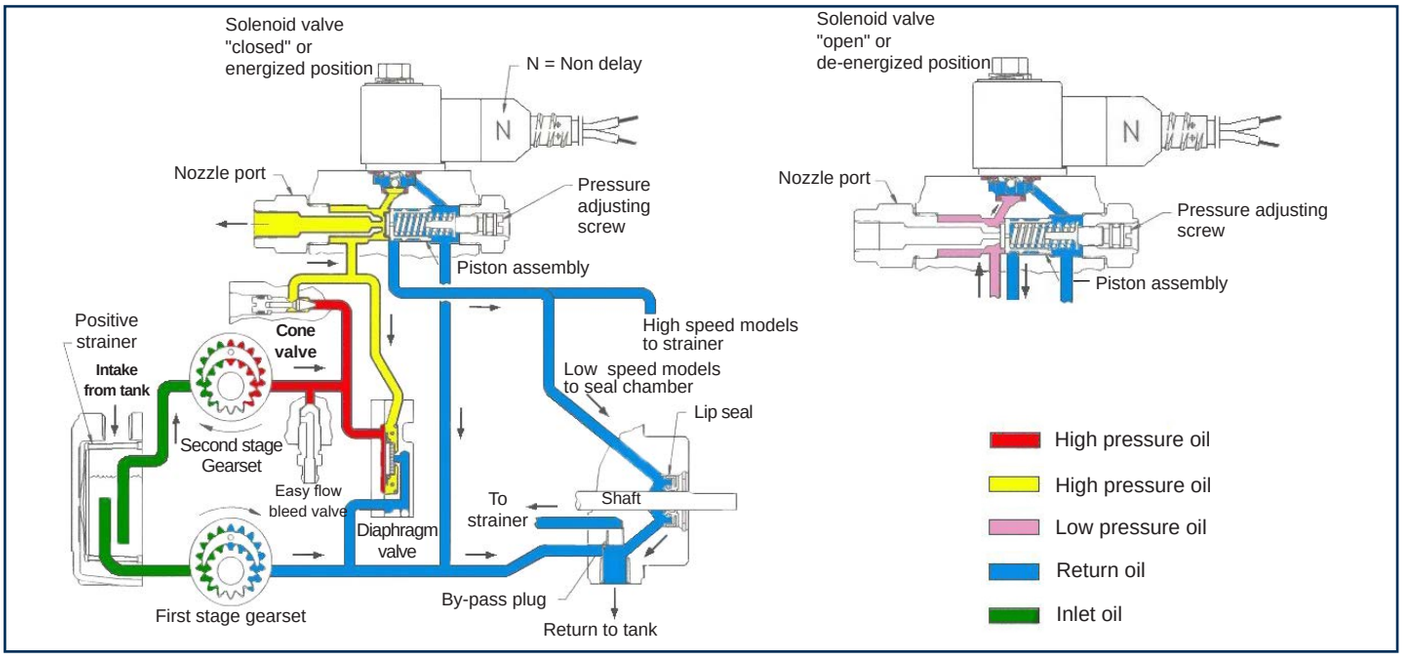

Suntec Industries Incorporated - 60 Aberdeen Drive - Glasgow, KY 42141 - USA
Tel : 270 651 7116 - www.suntecpumps.com

TECHNICAL DATA

General

Mounting	Flange mounting
Connection threads Inlet Nozzle outlet Pressure gauge port Bleeder valve port	 1/4 NPTF 1/8 NPTF 1/8 NPTF 1/8 NPTF
Valve function	Pressure regulation
Cut-off	Motor speed dependent
Strainer open area	V = min 3 in^2
Shaft	5/16 in
By-pass plug	Not inserted in return port, for one pipe system. To be inserted in return port with a 5/32
Certified	c UL us B6-B100: US only

Hydraulic data

Nozzle pressure range	100 - 150 psi (#2 fuel and lighter) 150 - 200 psi (#2 fuel)
Delivery pressure setting	100 psi
Rated nozzle flow	4 GPH @100 - 150 psi (#2 fuel oil and lighter fuel) 3 GPH @150 - 200 psi (#2 fuel oil)
Oil temperature	32 - 140°F
Ambiant temperature	32 - 140°F
Inlet and return pressures *NFPA limits pressures to 3 psi max*	10 psi max.
Suction height	Single pipe: 6" Hg max. vacuum, Two-pipe: 17" Hg max. vacuum, to prevent air separation from oil
Power consumption	100 W @100 psi

Solenoid valve characteristics

Frenquency	50/60 Hz
Consumption	9 W
Maximum pressure	300 psi

Solenoid coil number system

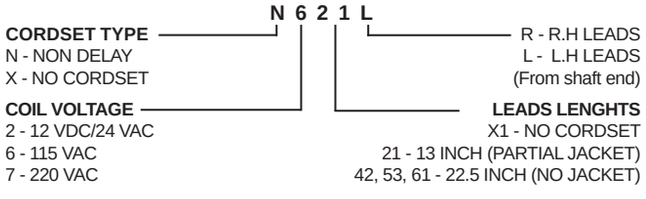

PUMP DIMENSIONS *(in inches)*

Example shows "A" rotation and nozzle outlet

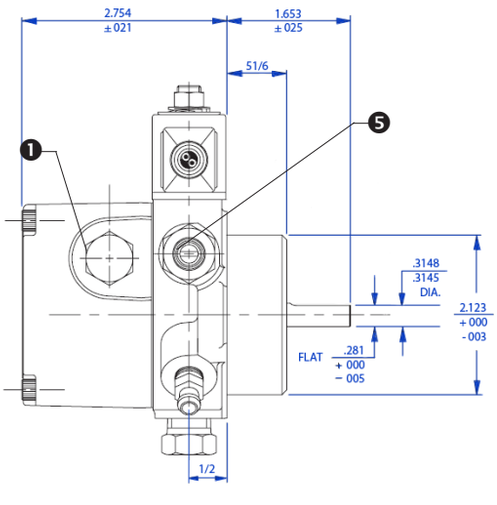

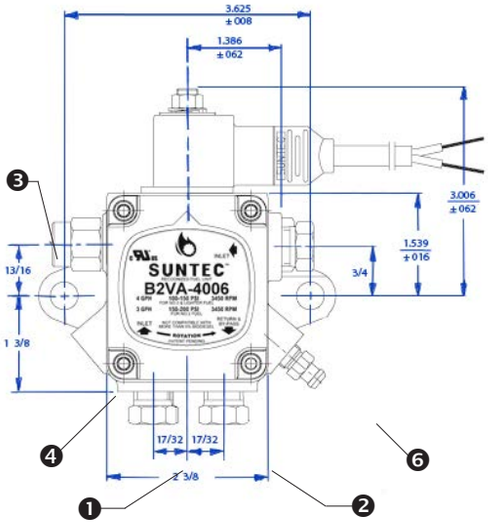

1. Inlet
2. Return and internal by-pass plug
3. Nozzle outlet
4. Cone valve
5. Pressure adjustment
6. Bleeder valve

SUNTEC™

SOLENOID TWO STAGE TWO STEP PUMP

B-8800B

B-8800B - US - Ed. 3 - November 2024

SUNTEC A-8800B model contains two gear sets and a built-in solenoid which provides a two-mode pressure operation. The first stage gear set sucks the fuel from the line, and the second stage gear set pressurizes the fuel. This unit is supplied for 1-pipe operation, without by-pass plug installed. Please verify before installation.

COMPATIBILITY

- Fuel oil #2 and lighter, B6-B100 (blends from 6% up to 100% biodiesel, per ASTM D396).

PUMP OPERATING PRINCIPLE

As the motor starts, the fuel from the second stage gearset is transferred to the pressure regulating valve.

The high pressure mode is obtained with the solenoid valve activated (ie. closed); activating this solenoid valve closes the by-pass channel to the return. Oil is then transferred to the nozzle line at the pressure given by the high pressure regulating valve.

The low pressure mode is obtained with the solenoid valve open (ie. non activated); the by-pass channel is open, the oil is supplied to the nozzle line via the by-pass hole and the low pressure adjustment is made by the screw on the solenoid tube.

It is preferable to set the high pressure given by the pump valve (with solenoid activated) before the low pressure, with solenoid non activated. Care should be taken not to overtighten the low pressure adjusting screw of the solenoid tube, as this may eliminate the low pressure range.

One pipe installation

The by-pass plug must not be installed. The excess fuel is returned back to the inlet.

Two pipe installation

The steel plug of the return port must be removed and the by-pass plug must be inserted in the return port allowing excess fuel is bypassed back to the tank. The return plug must not be reinstalled.

Bleed

In one pipe operation, the easy flow bleeder valve must be loosened to bleed the system. Bleeding in two pipe operation is automatic, but it may be accelerated by loosening the easy flow bleeder.

Note

Owing to the presence of the nozzle by-pass hole, the pump has no cut-off function; cut-off must be provided by an external solenoid valve.

PUMP IDENTIFICATION

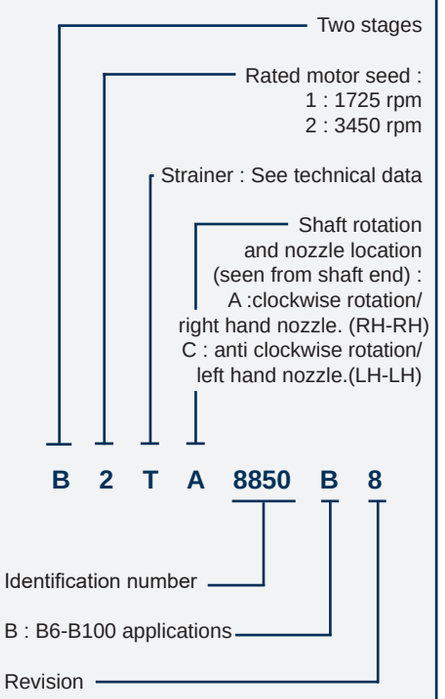

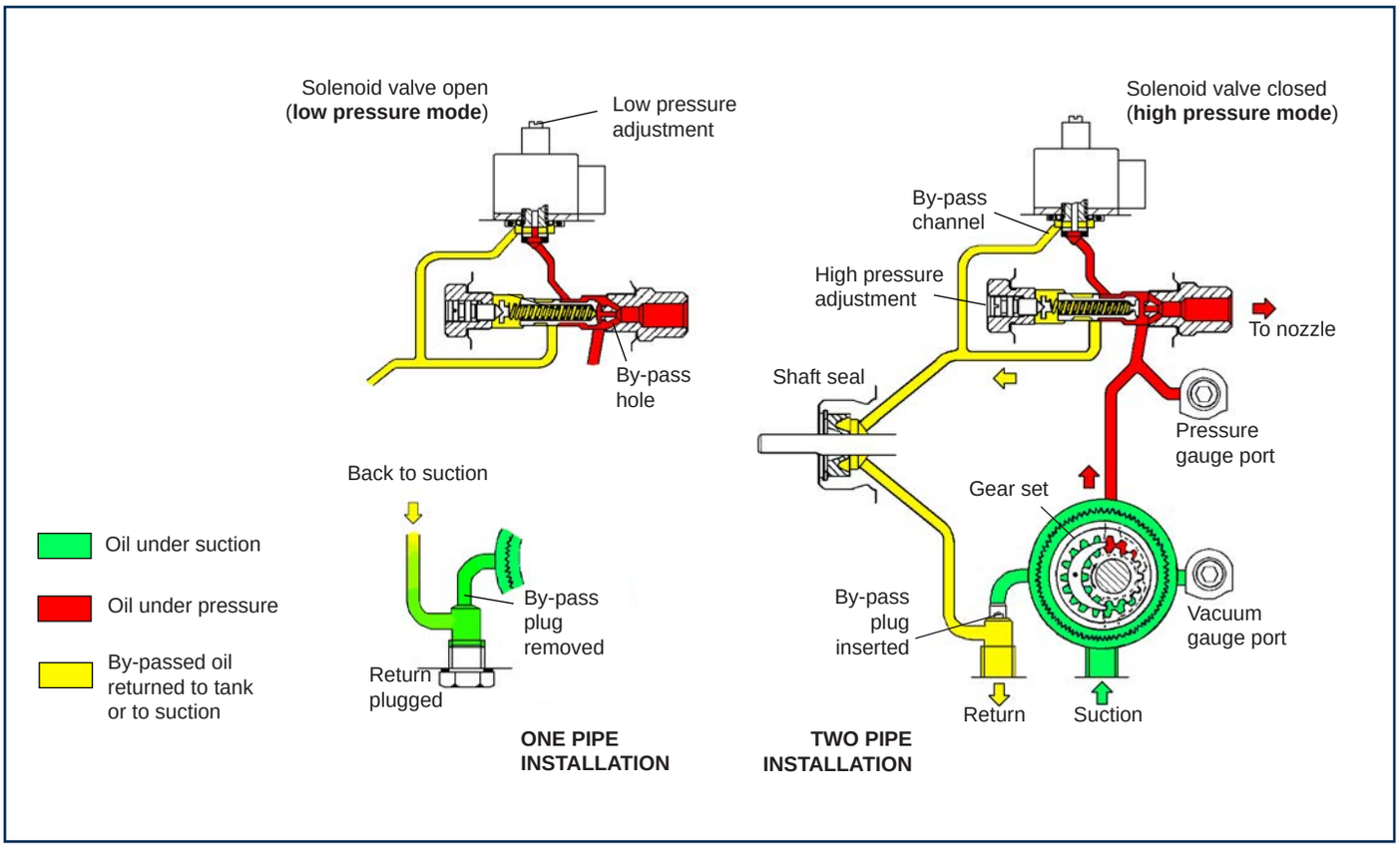

Suntec Industries Incorporated - 60 Aberdeen Drive - Glasgow, KY 42141 - USA
Tel : 270 651 7116 - www.suntecpumps.com

TECHNICAL DATA

General

Mounting	Flange mounting
Connection threads Inlet Nozzle outlet Pressure gauge port Bleeder valve port	 1/4 NPTF 1/8 NPTF 1/8 NPSF 1/8 NPSF
Valve function	Pressure regulation and cut-off
Cut-off	Motor speed dependent
Shaft	5/16 in
By-pass plug	Not inserted in return port, for one pipe system. To be inserted in return port with a 5/32 Allen key for two-pipe system

Strainer open area	T = min 10,5 in^2
Certified	c UL us B6-B100: US only

Hydraulic data

Oil temperature	32 - 140°F
Ambiant temperature	32 - 140°F
Inlet and return pressures *NFPA limits pressures to 3 psi max*	10 psi max.
Suction height	Single pipe: 6" Hg max. vacuum, Two-pipe: 17" Hg max. vacuum, to prevent air separation from oil

Nozzle rating

Model number	Nozzle rating	Power consumption at 300 PSI
B2TA-8850B	10 GPH at 300 PSI	250W
B2TA-8851B	16 GPH at 300 PSI	285W
B2TA-8852B	23 GPH at 300 PSI	330W

Solenoid valve characteristics

Frenquency	*50/60 Hz*
Consumption	*9 W*
Maximum pressure	*300 psi*

Solenoid coil number system

N 6 2 1 L

CORDSET TYPE
N - NON DELAY
X - NO CORDSET

COIL VOLTAGE
2 - 12 VDC/24 VAC
6 - 115 VAC
7 - 220 VAC

R - R.H LEADS
L - L.H LEADS
(From shaft end)

LEADS LENGHTS
X1 - NO CORDSET
21 - 13 INCH (PARTIAL JACKET)
42, 53, 61 - 22.5 INCH (NO JACKET)

PUMP DIMENSIONS *(in inches)*

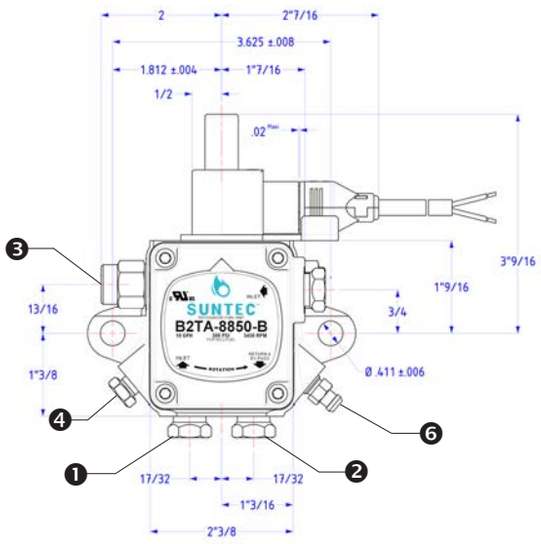

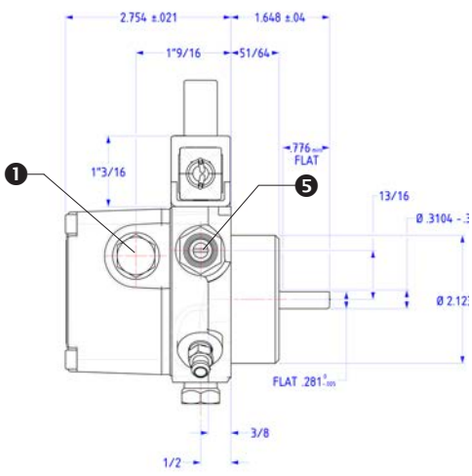

Two-pipe system
(by-pass plug inserted
in return port)

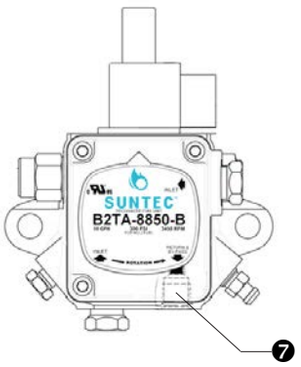

❶ Inlet ❷ Return ❸ Nozzle outlet ❹ Pressure gauge port ❺ Pressure adjustment ❻ Bleeder valve ❼ Internal by-pass plug

MEDIUM AND HIGH CAPACITY

SINGLE STAGE PUMP TYPE J

J

J - US - Ed 5 - November 2024

This is a general specification leaflet ; for specific applications not covered herein, contact Suntec.

The SUNTEC **J** oil pump is for medium capacity oil burners from 400 to 3000kW. It incorporates a pressure regulating valve and is avalaible with or without cut-off function.

COMPATIBILITY

- Fuel oil #4 and lighter, B6-B100 (blends from 6% up to 100% biodiesel, per ASTM D396)
- One or two-pipe system.
- Normally associated with in-line solenoid valve.

PUMP OPERATING PRINCIPLE

The gear set draws oil from the tank through the built-in filter and transfers it to the valve that regulates the oil pressure to the nozzle line. All oil that does not go through the nozzle line will be dumped through the valve back to the return line in two pipe installation or, if it is a one-pipe installation, back to the suction port in the gear-set. In that case, the by-pass plug must be removed from the return port and the return port sealed by steel plug and washer.

Models 1000 & 1001, the valve also has a cut-off function as follows :

- During starting period when the gear-set speed is increasing, all the oil passes through a special flat on the piston, back to the return. Once the speed reaches a certain value and the flow can no longer pass through this flat, then the pressure increases rapidly overcoming the valve spring force and opens the valve.
- During the stop sequence, the gear-set speed slows down and the valve closes when the gear-set capacity is lower than the flat flow.

The cut-on and cut-off speeds depend on the gear-set size and set pressure. Models 1002 & 1003 have no cut-off function. Cut-off must be provided by an external solenoid valve.

Bleed :

Bleeding in two pipe operation is automatic, but it may be accelerated by loosening the plug in a pressure gauge port.

In one pipe operation, a pressure port must be opened to bleed the system.

PUMP IDENTIFICATION

(Not all model combinations are available. Consult your Suntec representative)

J : Pressure regulation

Gear set capacity (see pump capacity curves)

Strainer

Shaft rotation and nozzle location (seen from shaft end)
A : clockwise rotation/ right hand nozzle.
B : clockwise rotation/ left hand nozzle.
C : anti clockwise rotation/ left hand nozzle.
D : anti clockwise rotation/ right hand nozzle.

Pressure range

J 6 P A C 1000 8 M

1000 : conical connection threads cut-off function
1001 : cylindrical connection threads cut-off function
1002 : cylindrical connection threads by-pass nozzle, no cut-off function
1003 : conical connection threads by-pass nozzle, no cut-off function

Revision number

Installation
P : by-pass plug installed in return port for two-pipe operation
M : without by-pass plug;return plugged for one-pipe operation

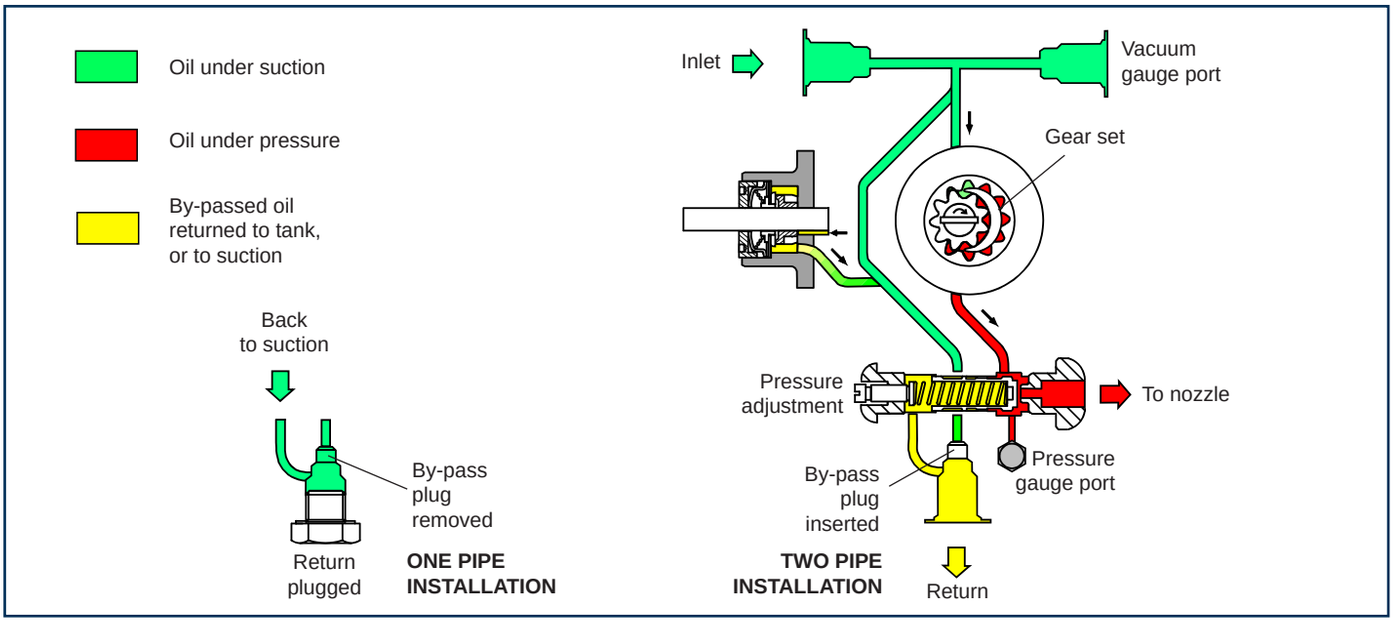

Suntec Industries Incorporated - 60 Aberdeen Drive - Glasgow, KY 42141 - USA
Tel : 270 651 7116 - www.suntecpumps.com

TECHNICAL DATA

General

Mounting	Flange mounting according to EN 225.	
	Models 1000/1003	Models 1001/1002
Connection threads	Conical	Cylindrical (according to ISO 228/1)
Inlet and return	1/4 NPTF	G 1/2
Nozzle outlet	1/8 NPTF	G 1/4
Pressure gauge port	1/8 NPSF	G 1/8
Vacuum gauge port	1/4 NPTF	G 1/2
Valve function	Pressure regulating and cut-off (except for 1002 and 1003 models).	
Strainer	Open area	Opening size
P :	97cm²	170µm
N :	45cm²	550µm
Shaft	7/16" (Ø 0.4365" - flat 0.396").	
By-pass plug	Inserted in return port for 2 pipe system; to be removed with a 3/16" Allen key for 1 pipe system.	
Weight	8.8 lBs	
Certified	except pressure range K UR	

Hydraulic data

Pressure range		Delivery pressure setting
	A : 20 - 40 psi	40 psi
	B : 100 - 200 psi	100 psi
	C : 150 - 300 psi	175 psi
	D : 40 - 80 psi	80 psi
	F : 10 - 20 psi	10 psi
	K : 200 - 435 psi	290 psi (for J1000 and J1001)
	150 - 435 psi	175 psi (for J1002 and J1003)
	K pressure range is only UR	
Operating viscosity	2 - 75 mm²/s (cSt) for J4/J6	
Oil temperature	32 - 194°F in the pump.	
Inlet pressure	10 psi max (NFPA limits pressures to 3 psi max).	
Return pressure	10 psi max (NFPA limits pressures to 3 psi max).	
Suction height	6,5 psi max. vacuum to prevent air separation from oil.	
Rated speed	3600 rpm max.	
Torque (@ 45 rpm)	2,7 in.lbs	

Pump capacity

Nozzle flow (GPH)

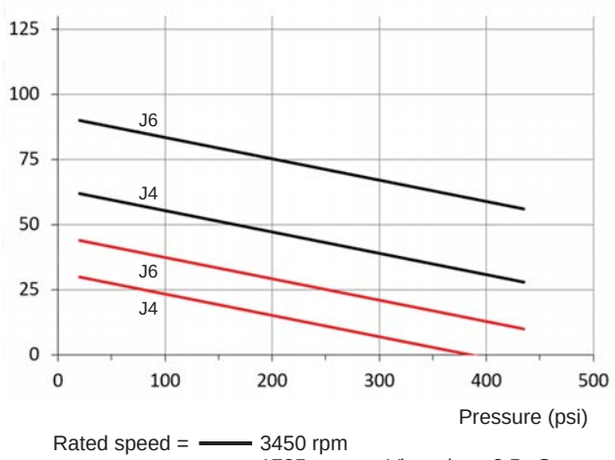

Ref: SK402 - 29/08/22; SK403 - 29/08/22

Rated speed = 3450 rpm
1725 rpm - Viscosity = 2.5 cSt

Data shown take into account a wear margin.
Do not oversize the pump when selecting the gear capacity

Power consumption

Power (W)

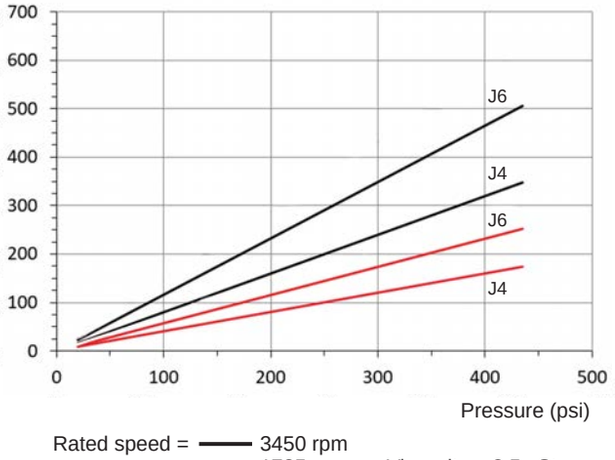

Rated speed = 3450 rpm
1725 rpm - Viscosity = 2.5 cSt

PUMP DIMENSIONS *(in inches)*

Example shows "C" rotation and nozzle outlet.

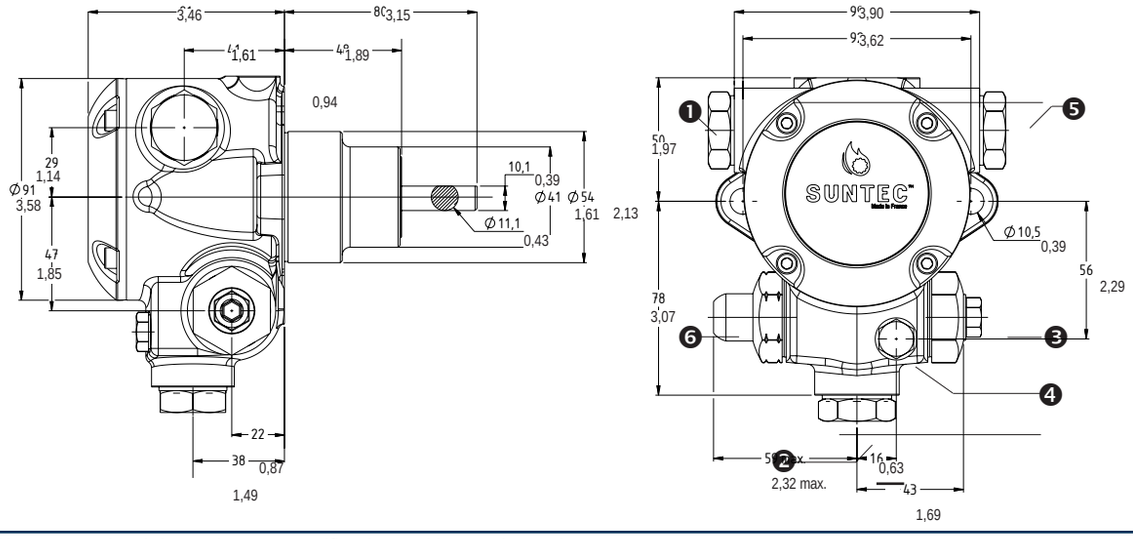

1. Suction or vacuum gauge port
2. Return and internal by-pass plug
3. Nozzle outlet
4. Pressure gauge port
5. Vacuum gauge port or suction
6. Pressure adjustment

Ref: SK402 - 29/08/22; SK403 - 29/08/22

Webster by SUNTEC

TWO STAGE PUMP
R SERIES

R

R - US - Ed. 1 - November 2024

The Webster R Series oil pump is for medium capacity oil burner and are rated up to 80 GPH (at 100 PSI). It incorporates a pressure regulating valve and is available with or without cut-off function. One period featuring the unique Webster rotary self cleaning filter, simple flange or hub mounting, and an extended shaft length, the **R** series is adaptable to virtually every replacement.

COMPATIBILITY

Fuel oil #2 and lighter.

PUMP OPERATING PRINCIPLE

One pipe installation :
The bypass plug must not be installed. The excess fuel is returned back to the inlet.

Two pipe installation :
The steel plug of the inlet port ❼ (see pump dimension) must be removed and the bypass plug must be inserted in the applicable inlet port allowing excess fuel is bypassed back to the tank. The return plug must not be reinstalled.
Two-pipe operation is recommended for all high capacity units.

Bleed :
Bleeding in two pipe operation is automatic for two-stage pump, but it may be accelerated by opening the easy flow bleeder or loosening pressure gauge port. If single stage or pump with 1/8 NPTF nozzle outlet (pump code ends by 3 or 4) bleed all air from the system by opening bleeder valve or loosening pressure gauge port.
In one pipe operation, the easy flow bleeder valve or pressure gauge port must be loosened to bleed the system.

PUMP IDENTIFICATION

2R : two stage - 1725rpm
22R : two stage - 3450rpm

Number of filter section

Pressure regulation

Pressure gear size

Shaft rotation and nozzle location (seen from shaft end)
A : clockwise rotation/ left hand end nozzle (RH-LH = SUNTEC B rotation)
B : counterclockwise rotation/ right hand nozzle (LH-RH = SUNTEC D rotation)
C : counterclockwise rotation/ left hand nozzle (LH-LH = SUNTEC C rotation)
D : clockwise rotation/ right hand end nozzle (RH-RH = SUNTEC A rotation)

22R 3 2 2 D - 5 AA 14

4 : suction gear same size as pressure gear
5 : suction gear one size larger than pressure gear

Customer variation/shaft extension
BK : 1 13/16
BQ : 1 7/8
AA : 2 7/16
C : 3 11/16

Even : 2-pipe operation
Odd : 1-pipe operation

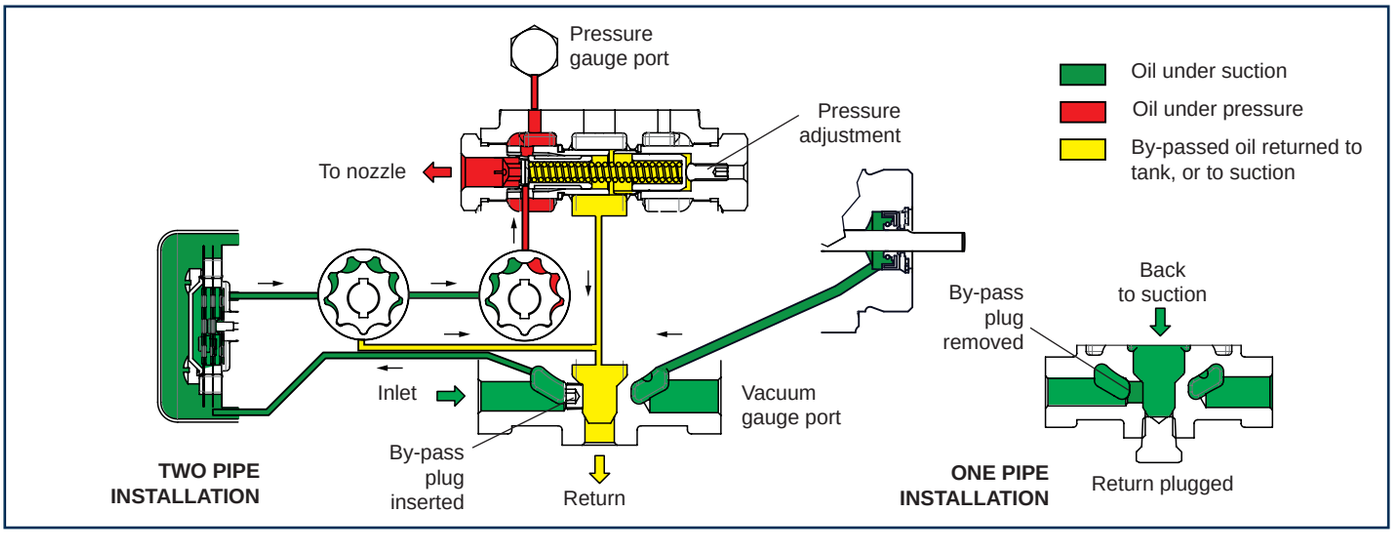

Suntec Industries Incorporated - 60 Aberdeen Drive - Glasgow, KY 42141 - USA
Tel : 270 651 7116 - www.suntecpumps.com

TECHNICAL DATA

General

Mounting	Flange mounting according to EN 225. Hub with slot for hub mounting.
Connection threads Inlet and return Nozzle outlet Pressure gauge port	 1/4 NPTF Pump ending in 3 or 4 : 1/8 NPTF Pump ending in 13 or 14 : 1/4 NPTF 1/4 NPTF
Valve function	Pressure regulating and cut-off (except model ending by 13 or 14)
Shaft	7/16" (Ø 0.4365 flat 0.396")
Bypass plug	Inserted in applicable inlet port (❼) for 2 pipe system; to be removed with a 3/16" Allen key for 1 pipe system.
Certified	c UL us

Hydraulic data

Pressure range	Max pressure	Delivery pressure setting
	1 : 150 PSI	100 PSI
	2 : 300 PSI	100 PSI
	3 : 20 PSI	10 PSI
	4 : 45 PSI	40 PSI
	5 : 100 PSI	100 PSI
	6 : 125 PSI	100 PSI
	8 : 80 PSI	20 PSI
Inlet and return pressures *NFPA limits pressures to 3psi max*	10 psi max.	
Suction height	Two-stage unit : 15" Hg max. vacuum Single stage unit : 10" Hg max. vacuum	
Torque (@45rpm)	4 in.lbs (gear size 0; 1; 2 & 3) 6 in.lbs (gear size 6 & 8)	

Variable X dimension

	X *(in inch)*
22R211 / 22R220 / 22R221 / 22R250	3,75
2R213 / 2R223 / 2R233 / 2R253 / 2R283 / 22R322	4,25
22R613 / 22R623	4,75
2R616 / 2R618 / 2R626 / 2R628 / 2R636 / 2R656 / 2R686	5,75

PUMP DIMENSIONS *(in inches)*

Examples shows "D" rotation and nozzle outlet.

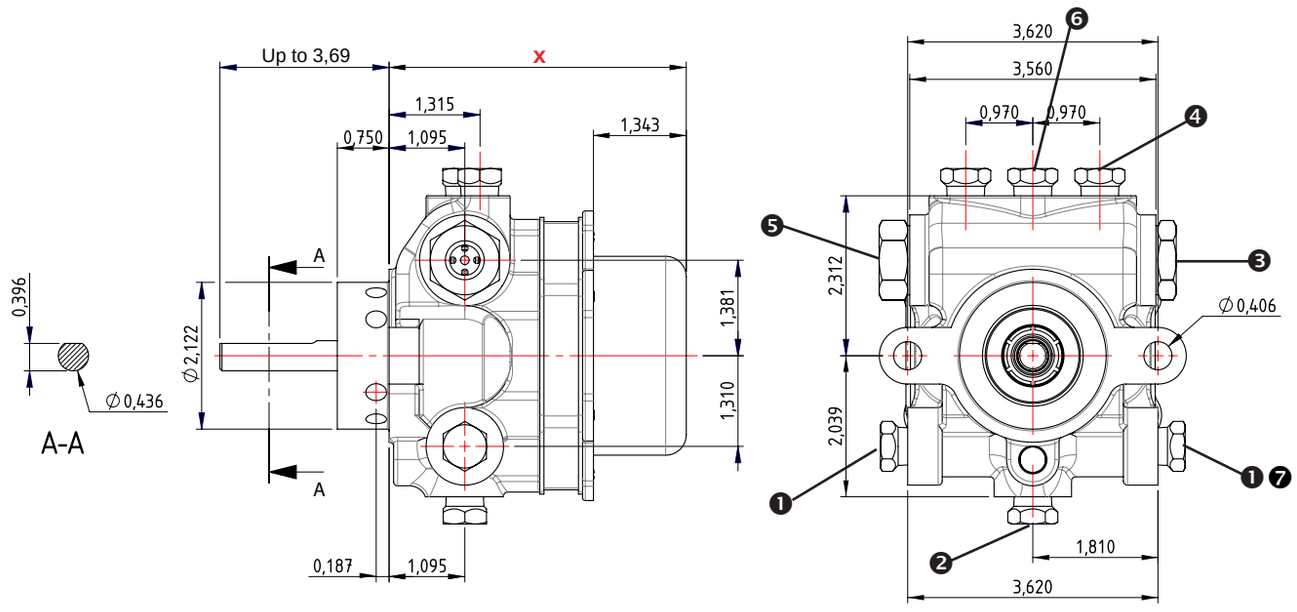

Model	Rotation & Nozzle location	Mounting type	Nozzle outlet	Rated pressure	Flow rate @rated pressure	Remarks
2R111C-5BQ3	LH-LH	Flange Mtg	1/8 NPTF	150 PSI	7 GPH at 1725 RPM	With bleeder valve
2R111C-5C3	LH-LH	Flange Mtg	1/8 NPTF	150 PSI	7 GPH at 1725 RPM	With bleeder valve
2R111D-5A3	RH-RH	Flange Mtg	1/8 NPTF	150 PSI	7 GPH at 1725 RPM	With bleeder valve
2R111D-5C3	RH-RH	Flange Mtg	1/8 NPTF	150 PSI	10 GPH at 1725 RPM	With bleeder valve
2R121C-5BQ3	LH-LH	Flange Mtg	1/8 NPTF	300 PSI	7 GPH at 1725 RPM	With bleeder valve
2R121C-5C3	LH-LH	Flange Mtg	1/8 NPTF	300 PSI	7 GPH at 1725 RPM	With bleeder valve
2R121D-5C3	RH-RH	Flange Mtg	1/8 NPTF	300 PSI	7 GPH at 1725 RPM	With bleeder valve
2R122C-4C3	LH-LH	Flange Mtg	1/8 NPTF	300 PSI	12 GPH at 1725 RPM	With bleeder valve
2R122C-5BQ3	LH-LH	Flange Mtg	1/8 NPTF	300 PSI	12 GPH at 1725 RPM	With bleeder valve
2R122D-4C3	RH-RH	Flange Mtg	1/8 NPTF	300 PSI	12 GPH at 1725 RPM	With bleeder valve
2R162C-4C5	LH-LH	Flange Mtg	1/8 NPTF	125 PSI	7 GPH at 1725 RPM	With bleeder valve
2R162D-4C5	RH-RH	Flange Mtg	1/8 NPTF	125 PSI	7 GPH at 1725 RPM	
2R181C-5BQ4	LH-LH	Flange Mtg	1/8 NPTF	80 PSI	15 GPH at 1725 RPM	No cut-off function
2R213C-5BQ14	LH-LH	Flange Mtg	1/4 NPTF	150 PSI	29 GPH at 1725 RPM	No cut-off function
2R213C-5C3	LH-LH	Flange Mtg	1/8 NPTF	150 PSI	26 GPH at 1725 RPM	
2R213D-5A3	RH-RH	Flange Mtg	1/8 NPTF	150 PSI	26 GPH at 1725 RPM	
2R213D-5C3	RH-RH	Flange Mtg	1/8 NPTF	150 PSI	26 GPH at 1725 RPM	No cut-off function
2R223A-5BE14	RH-LH	Hub Mtg	1/4 NPTF	300 PSI	23 GPH at 1725 RPM	No cut-off function
2R223A-5BZ14	RH-LH	Hub Mtg	1/4 NPTF	300 PSI	23 GPH at 1725 RPM	No cut-off function
2R223B-5C3	LH-RH	Flange Mtg	1/8 NPTF	300 PSI	20 GPH at 1725 RPM	No cut-off function
2R223C-5AA14	LH-LH	Flange Mtg	1/4 NPTF	300 PSI	23 GPH at 1725 RPM	No cut-off function
2R223C-5BQ14	LH-LH	Flange Mtg	1/4 NPTF	300 PSI	23 GPH at 1725 RPM	No cut-off function
2R223C-5BQ3	LH-LH	Flange Mtg	1/8 NPTF	300 PSI	23 GPH at 1725 RPM	
2R223C-5C3	LH-LH	Flange Mtg	1/8 NPTF	300 PSI	20 GPH at 1725 RPM	No cut-off function
2R223D-5AA14	RH-RH	Flange Mtg	1/4 NPTF	300 PSI	23 GPH at 1725 RPM	No cut-off function
2R223D-5BE13	RH-RH	Hub Mtg	1/4 NPTF	300 PSI	23 GPH at 1725 RPM	No cut-off function
2R223D-5C3	RH-RH	Flange Mtg	1/8 NPTF	300 PSI	20 GPH at 1725 RPM	
2R233C-5BQ4	LH-LH	Flange Mtg	1/8 NPTF	20 PSI	30 GPH at 1725 RPM	
2R233D-5AA4	RH-RH	Flange Mtg	1/8 NPTF	20 PSI	30 GPH at 1725 RPM	
2R233D-5BQ4	RH-RH	Flange Mtg	1/8 NPTF	20 PSI	30 GPH at 1725 RPM	
2R233D-5BX4	RH-RH	Hub Mtg	1/8 NPTF	20 PSI	30 GPH at 1725 RPM	No cut-off function
2R253C-5BQ14	LH-LH	Flange Mtg	1/4 NPTF	100 PSI	30 GPH at 1725 RPM	No cut-off function
2R253D-5AA14	RH-RH	Flange Mtg	1/4 NPTF	100 PSI	30 GPH at 1725 RPM	No cut-off function
2R283C-5BQ4	LH-LH	Flange Mtg	1/8 NPTF	80 PSI	30 GPH at 1725 RPM	
2R283D-5BQ4	RH-RH	Flange Mtg	1/8 NPTF	80 PSI	30 GPH at 1725 RPM	

Model	Rotation & Nozzle location	Mounting type	Nozzle outlet	Rated pressure	Flow rate @rated pressure	Remarks
2R343D-5AI13	RH-RH	Flange Mtg	1/4 NPTF	45 PSI	34 GPH at 1725 RPM	No cut-off function
2R616C-5BQ13	LH-LH	Flange Mtg	1/4 NPTF	150 PSI	62 GPH at 1725 RPM	No cut-off function
2R616C-5C14	LH-LH	Flange Mtg	1/4 NPTF	150 PSI	62 GPH at 1725 RPM	No cut-off function
2R616D-5C14	RH-RH	Flange Mtg	1/4 NPTF	150 PSI	62 GPH at 1725 RPM	No cut-off function
2R618D-4C14	RH-RH	Flange Mtg	1/4 NPTF	150 PSI	75 GPH at 1725 RPM	No cut-off function
2R626A-5DR14	RH-LH	Flange Mtg	1/4 NPTF	300 PSI	50 GPH at 1725 RPM	No cut-off function
2R626C-5BQ14	LH-LH	Flange Mtg	1/4 NPTF	300 PSI	50 GPH at 1725 RPM	No cut-off function
2R626C-5BZ14	LH-LH	Hub Mtg	1/4 NPTF	300 PSI	50 GPH at 1725 RPM	No cut-off function
2R626C-5C14	LH-LH	Flange Mtg	1/4 NPTF	300 PSI	50 GPH at 1725 RPM	No cut-off function
2R626D-5AA14	RH-RH	Flange Mtg	1/4 NPTF	300 PSI	50 GPH at 1725 RPM	No cut-off function
2R626D-5BX14	RH-RH	Hub Mtg	1/4 NPTF	300 PSI	50 GPH at 1725 RPM	No cut-off function
2R626D-5C14	RH-RH	Flange Mtg	1/4 NPTF	300 PSI	50 GPH at 1725 RPM	No cut-off function
2R628C-4BQ14	LH-LH	Flange Mtg	1/4 NPTF	300 PSI	50 GPH at 1725 RPM	No cut-off function
2R628C-4C14	LH-LH	Flange Mtg	1/4 NPTF	300 PSI	60 GPH at 1725 RPM	No cut-off function
2R628D-4C14	RH-RH	Flange Mtg	1/4 NPTF	300 PSI	60 GPH at 1725 RPM	No cut-off function
2R636C-5BQ4	LH-LH	Flange Mtg	1/8 NPTF	20 PSI	72 GPH at 1725 RPM	
2R636D-5AA4	RH-RH	Flange Mtg	1/8 NPTF	20 PSI	72 GPH at 1725 RPM	No cut-off function
2R656D-5AA14	RH-RH	Flange Mtg	1/4 NPTF	100 PSI	66 GPH at 1725 RPM	No cut-off function
2R656D-5BQ14	RH-RH	Flange Mtg	1/4 NPTF	100 PSI	66 GPH at 1725 RPM	No cut-off function
2R686C-5BQ4	LH-LH	Flange Mtg	1/8 NPTF	80 PSI	65 GPH at 1725 RPM	
22R211C-5A3	LH-LH	Flange Mtg	1/8 NPTF	150 PSI	25 GPH at 3450 RPM	With bleeder valve
22R211C-5C14	LH-LH	Flange Mtg	1/4 NPTF	150 PSI	26 GPH at 3450 RPM	With bleeder valve / No cut-off function
22R211C-5C3	LH-LH	Flange Mtg	1/8 NPTF	150 PSI	25 GPH at 3450 RPM	With bleeder valve
22R211D-5A3	RH-RH	Flange Mtg	1/8 NPTF	150 PSI	25 GPH at 3450 RPM	With bleeder valve
22R211D-5C14	RH-RH	Flange Mtg	1/4 NPTF	150 PSI	26 GPH at 3450 RPM	With bleeder valve / No cut-off function
22R211D-5C3	RH-RH	Flange Mtg	1/8 NPTF	150 PSI	25 GPH at 3450 RPM	With bleeder valve
22R220C-5C14	LH-LH	Flange Mtg	1/4 NPTF	300 PSI	14 GPH at 3450 RPM	With bleeder valve / No cut-off function
22R220C-5C3	LH-LH	Flange Mtg	1/8 NPTF	300 PSI	12 GPH at 3450 RPM	With bleeder valve
22R220D-5AA14	RH-RH	Flange Mtg	1/4 NPTF	300 PSI	14 GPH at 3450 RPM	With bleeder valve / No cut-off function
22R220D-5BK14	RH-RH	Flange Mtg	1/4 NPTF	300 PSI	14 GPH at 3450 RPM	With bleeder valve / No cut-off function
22R220D-5BK3	RH-RH	Flange Mtg	1/8 NPTF	300 PSI	12 GPH at 3450 RPM	With bleeder valve
22R220D-5BX14	RH-RH	Hub Mtg	1/4 NPTF	300 PSI	14 GPH at 3450 RPM	With bleeder valve / No cut-off function
22R220D-5C14	RH-RH	Flange Mtg	1/4 NPTF	300 PSI	14 GPH at 3450 RPM	With bleeder valve / No cut-off function
22R220D-5C3	RH-RH	Flange Mtg	1/8 NPTF	300 PSI	12 GPH at 3450 RPM	With bleeder valve
22R221A-5A3	RH-LH	Flange Mtg	1/8 NPTF	300 PSI	21 GPH at 3450 RPM	With bleeder valve

Model	Rotation & Nozzle location	Mounting type	Nozzle outlet	Rated pressure	Flow rate @rated pressure	Remarks
22R221A-5C3	RH-LH	Flange Mtg	1/8 NPTF	300 PSI	21 GPH at 3450 RPM	With bleeder valve
22R221B-5AA14	LH-RH	Flange Mtg	1/4 NPTF	300 PSI	23 GPH at 3450 RPM	With bleeder valve / No cut-off function
22R221B-5BX14	LH-RH	Hub Mtg	1/4 NPTF	300 PSI	23 GPH at 3450 RPM	With bleeder valve / No cut-off function
22R221C-5A14	LH-LH	Flange Mtg	1/4 NPTF	300 PSI	23 GPH at 3450 RPM	With bleeder valve / No cut-off function
22R221C-5AA14	LH-LH	Flange Mtg	1/4 NPTF	300 PSI	23 GPH at 3450 RPM	With bleeder valve / No cut-off function
22R221C-5C14	LH-LH	Flange Mtg	1/4 NPTF	300 PSI	23 GPH at 3450 RPM	With bleeder valve / No cut-off function
22R221C-5C3	LH-LH	Flange Mtg	1/8 NPTF	300 PSI	21 GPH at 3450 RPM	With bleeder valve
22R221D-5AA14	RH-RH	Flange Mtg	1/4 NPTF	300 PSI	23 GPH at 3450 RPM	With bleeder valve / No cut-off function
22R221D-5BK14	RH-RH	Flange Mtg	1/4 NPTF	300 PSI	23 GPH at 3450 RPM	With bleeder valve / No cut-off function
22R221D-5BX14	RH-RH	Hub Mtg	1/4 NPTF	300 PSI	23 GPH at 3450 RPM	With bleeder valve / No cut-off function
22R221D-5C14	RH-RH	Flange Mtg	1/4 NPTF	300 PSI	23 GPH at 3450 RPM	With bleeder valve / No cut-off function
22R221D-5C3	RH-RH	Flange Mtg	1/8 NPTF	300 PSI	21 GPH at 3450 RPM	No cut-off function
22R322B-5AA14	LH-RH	Flange Mtg	1/4 NPTF	300 PSI	34 GPH at 3450 RPM	No cut-off function
22R322C-5C14	LH-LH	Flange Mtg	1/4 NPTF	300 PSI	34 GPH at 3450 RPM	No cut-off function
22R322C-5BK14	LH-LH	Flange Mtg	1/4 NPTF	300 PSI	34 GPH at 3450 RPM	No cut-off function
22R322D-5AA14	RH-RH	Flange Mtg	1/4 NPTF	300 PSI	34 GPH at 3450 RPM	No cut-off function
22R322D-5BK14	RH-RH	Flange Mtg	1/4 NPTF	300 PSI	34 GPH at 3450 RPM	No cut-off function
22R322D-5BX14	RH-RH	Hub Mtg	1/4 NPTF	300 PSI	34 GPH at 3450 RPM	No cut-off function
22R322D-5C14	RH-RH	Flange Mtg	1/4 NPTF	300 PSI	34 GPH at 3450 RPM	No cut-off function
22R613D-5A13	RH-RH	Flange Mtg	1/4 NPTF	150 PSI	63 GPH at 3450 RPM	No cut-off function
22R623A-5BE14	RH-LH	Hub Mtg	1/4 NPTF	300 PSI	56 GPH at 3450 RPM	No cut-off function
22R623B-5C14	LH-RH	Flange Mtg	1/4 NPTF	300 PSI	56 GPH at 3450 RPM	No cut-off function
22R623C-5AA14	LH-LH	Flange Mtg	1/4 NPTF	300 PSI	56 GPH at 3450 RPM	No cut-off function
22R623C-5BQ14	LH-LH	Flange Mtg	1/4 NPTF	300 PSI	56 GPH at 3450 RPM	No cut-off function
22R623C-5C14	LH-LH	Flange Mtg	1/4 NPTF	300 PSI	56 GPH at 3450 RPM	No cut-off function
22R623D-5AA14	RH-RH	Flange Mtg	1/4 NPTF	300 PSI	56 GPH at 3450 RPM	No cut-off function
22R623D-5BK14	RH-RH	Flange Mtg	1/4 NPTF	300 PSI	56 GPH at 3450 RPM	No cut-off function
22R623D-5BX14	RH-RH	Hub Mtg	1/4 NPTF	300 PSI	56 GPH at 3450 RPM	No cut-off function
22R623D-5C14	RH-RH	Flange Mtg	1/4 NPTF	300 PSI	56 GPH at 3450 RPM	With bleeder valve / No cut-off function

TWO STAGE PUMP
V SERIES

V

V - US - Ed. 1 - November 2024

The Webster V Serie oil pump is for high capacity of commercial, industrial and institutional heating application. This pump is also designed for use with heavy oil.
Pump are rated :
For single stage unit : up to 180 GPH with #2 fuel oil, to 270 GPH with 1000 SSU
For two-stage unit : up to 145 GPH with #2 fuel oil, to 205 GPH with 1000 SSU.

COMPATIBILITY

#2 fuel oil and lighter ; fuel up to 1000 SSU.

PUMP OPERATING PRINCIPLE

One pipe installation :
V pumps are not recommended for us in one pipe system..

Two pipe installation :
The steel plug of the inlet port ❼ (see pump dimension) must be removed and the bypass plug must be inserted in the applicable inlet port allowing excess fuel is bypassed back to the tank. The return plug must not be reinstalled.
V serie pumps are shipped from the factory set for 2 pipe system.

Bleed :
Bleeding in two pipe operation is automatic for two-stage pump and most single stage pump. To bleed manually the system loosened pressure gauge port.

PUMP IDENTIFICATION

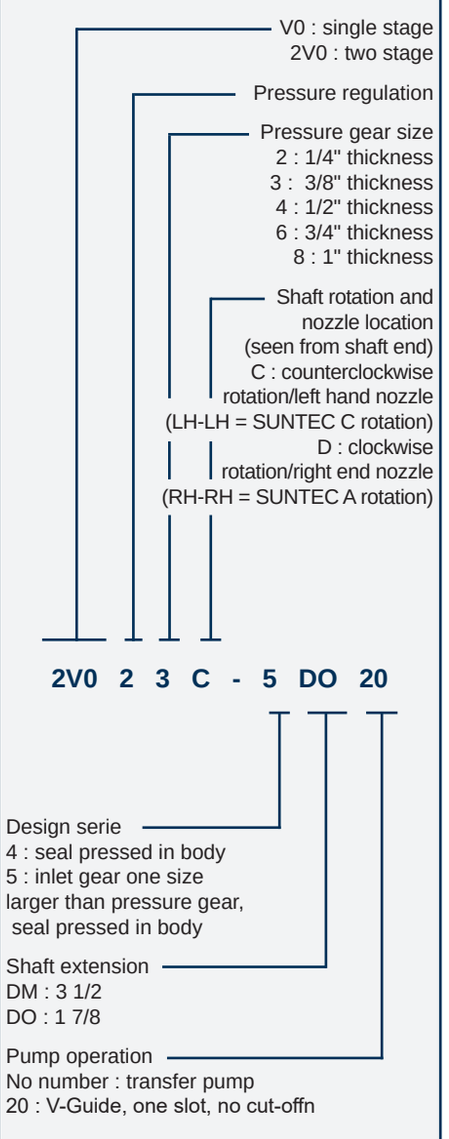

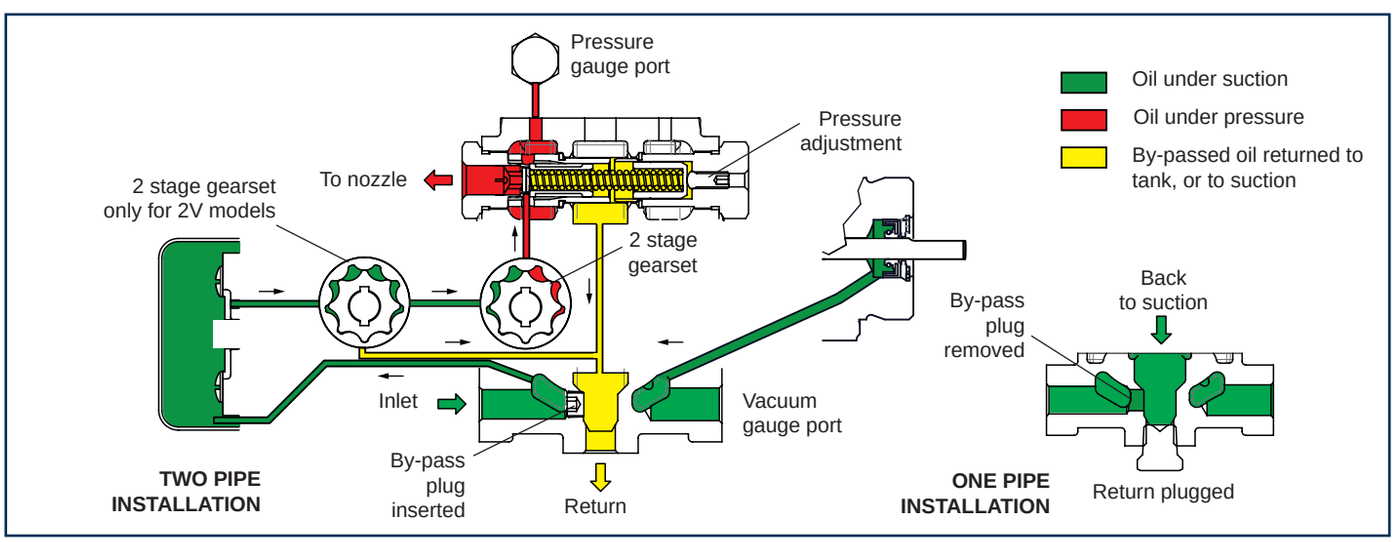

Suntec Industries Incorporated - 60 Aberdeen Drive - Glasgow, KY 42141 - USA
Tel : 270 651 7116 - www.suntecpumps.com

TECHNICAL DATA

General

Mounting	Flange mounting according to EN 225.
Connection threads Inlet in cover 2 optional inlets Return Nozzle outlet Pressure gauge port	 1/2 NPTF 3/8 NPTF 3/8 NPTF 1/4 NPTF 1/4 NPTF
Valve function	Pressure regulating
Shaft diameter	7/16" (Ø 0.4365 flat 0.396")
Shaft length	DM : 3,5" extension from mounting face DO : 1,88" extension from mounting face
Bypass plug	Inserted in applicable inlet port ❷ for 2 pipe system; V pumps are not recommended for us in 1 pipe system.
Strainer open area	No internal filter external line filter recomended
Certified	c UL us

Hydraulic data

Pressure range		Delivery pressure setting
	0 : no internal pressure	
	2 : 125 - 330 PSI	150 psi
	5 : 85 - 120 PSI	100 psi
	8 : 15 -85 PSI	20 psi
Operating viscosity	34 to 1000 SSU	
Inlet and return pressures *(NFPA limits pressures to 3psi max)*	10 psi max.	
Suction height	Two-stage unit : 15" Hg max. vacuum Single stage unit : 10" Hg max. vacuum	
Torque (@45rpm)	4 in.lbs (gear size 2 ; 3 & 4) 6 in.lbs (gear size 6 & 8)	

Variable X dimension

	X *(in inch)*
V002 / V003 / V004 / V006 / V022 / V023 / V024 / V026 / V052 / V056 / V086	5,13
V008 / V028	5,67
2V023 / 2V024	6,17
2V006 / 2V026 / 2V086	7,75

PUMP DIMENSIONS *(in inches)*

Examples shows "D" rotation and nozzle outlet.

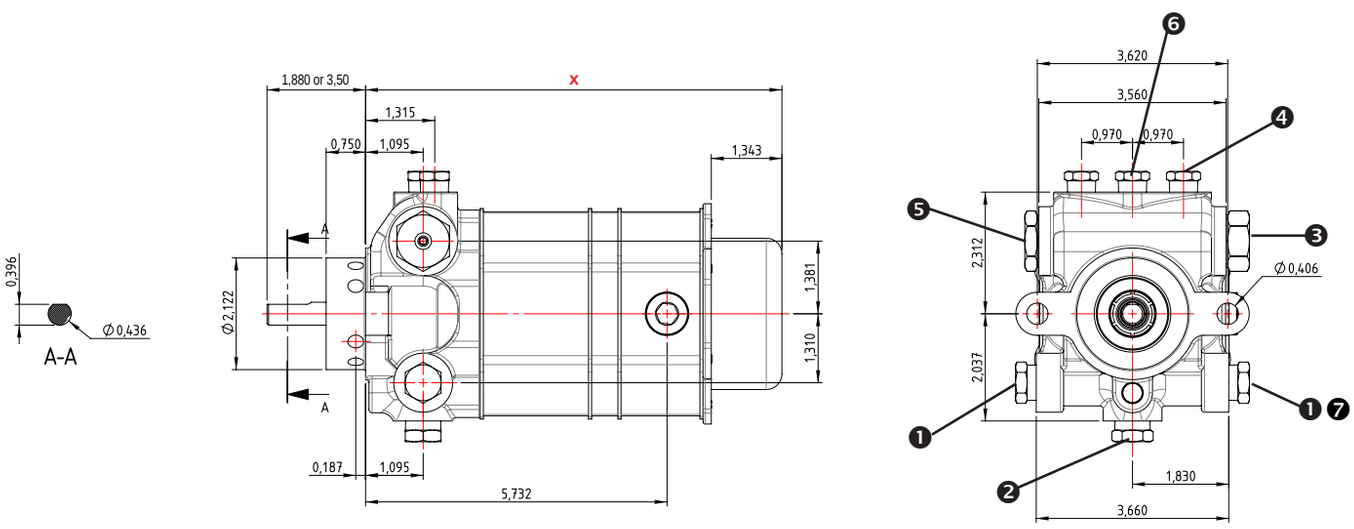

❶Inlet ❷Return ❸Nozzle outlet ❹Pressure gauge port ❺Pressure adjustment ❻Optional return ❼Inlet with bypass plug

Model	Rotation & Nozzle location	Rated pressure	Flow rate @rated pressure (34 SSU)	Flow rate @rated pressure (1000 SSU)
V002C-4DO	LH-LH	20 PSI	45 GPH at 1725 RPM / 85 GPH at 3450 RPM	70 GPH at 1725 RPM / 140 GPH at 3450 RPM
V002C-4EJ	LH-LH	20 PSI	45 GPH at 1725 RPM / 85 GPH at 3450 RPM	70 GPH at 1725 RPM / 140 GPH at 3450 RPM
V003C-4DO	LH-LH	20 PSI	70 GPH at 1725 RPM / 140 GPH at 3450 RPM	100 GPH at 1725 RPM / 205 GPH at 3450 RPM
V004C-4DO	LH-LH	20 PSI	95 GPH at 1725 RPM / 175 GPH at 3450 RPM	140 GPH at 1725 RPM / 270 GPH at 3450 RPM
V006C-4DO	LH-LH	20 PSI	145 GPH at 1725 RPM	200 GPH at 1725 RPM
V006D-4DO	RH-RH	20 PSI	145 GPH at 1725 RPM	200 GPH at 1725 RPM
V022C-4DO20	LH-LH	300 PSI	20 GPH at 1725 RPM / 60 GPH at 3450 RPM	50 GPH at 1725 RPM / 120 GPH at 3450 RPM
V022D-4DO20	RH-RH	300 PSI	20 GPH at 1725 RPM / 60 GPH at 3450 RPM	50 GPH at 1725 RPM / 120 GPH at 3450 RPM
V023C-4DM20	LH-LH	300 PSI	40 GPH at 1725 RPM / 105 GPH at 3450 RPM	80 GPH at 1725 RPM / 185 GPH at 3450 RPM
V023C-4DO20	LH-LH	300 PSI	40 GPH at 1725 RPM / 105 GPH at 3450 RPM	80 GPH at 1725 RPM / 185 GPH at 3450 RPM
V023D-4DO20	RH-RH	300 PSI	40 GPH at 1725 RPM / 105 GPH at 3450 RPM	80 GPH at 1725 RPM / 185 GPH at 3450 RPM
V024C-4DM20	LH-LH	300 PSI	60 GPH at 1725 RPM / 140 GPH at 3450 RPM	110 GPH at 1725 RPM / 240 GPH at 3450 RPM
V024C-4DO20	LH-LH	300 PSI	60 GPH at 1725 RPM / 140 GPH at 3450 RPM	110 GPH at 1725 RPM / 240 GPH at 3450 RPM
V024D-4DM20	RH-RH	300 PSI	60 GPH at 1725 RPM / 140 GPH at 3450 RPM	110 GPH at 1725 RPM / 240 GPH at 3450 RPM
V024D-4DO20	RH-RH	300 PSI	60 GPH at 1725 RPM / 140 GPH at 3450 RPM	110 GPH at 1725 RPM / 240 GPH at 3450 RPM
V026C-4DM20	LH-LH	300 PSI	95 GPH at 1725 RPM	155 GPH at 1725 RPM
V026C-4DO20	LH-LH	300 PSI	95 GPH at 1725 RPM	155 GPH at 1725 RPM
V026D-4DM20	RH-RH	300 PSI	95 GPH at 1725 RPM	155 GPH at 1725 RPM
V026D-4DO20	RH-RH	300 PSI	95 GPH at 1725 RPM	155 GPH at 1725 RPM
V028C-4DM20	LH-LH	300 PSI	115 GPH at 1725 RPM	190 GPH at 1725 RPM
V028C-4DO20	LH-LH	300 PSI	115 GPH at 1725 RPM	190 GPH at 1725 RPM
V028D-4DM20	RH-RH	300 PSI	115 GPH at 1725 RPM	190 GPH at 1725 RPM
V028D-4DO20	RH-RH	300 PSI	115 GPH at 1725 RPM	190 GPH at 1725 RPM
V052D-4DO20	RH-RH	100 PSI	40 GPH at 1725 RPM / 75 GPH at 3450 RPM	65 GPH at 1725 RPM / 135 GPH at 3450 RPM
V056C-4DO20	LH-LH	100 PSI	130 GPH at 1725 RPM	190 GPH at 1725 RPM
V056D-4DO20	RH-RH	100 PSI	130 GPH at 1725 RPM	190 GPH at 1725 RPM
V086C-4DO20	LH-LH	80 PSI	135 GPH at 1725 RPM	190 GPH at 1725 RPM
2V006C-5DO	LH-LH	300 PSI	145 GPH at 1725 RPM	200 GPH at 1725 RPM
2V006D-5DO	RH-RH	300 PSI	145 GPH at 1725 RPM	200 GPH at 1725 RPM
2V022C-5DM20	LH-LH	300 PSI	20 GPH at 1725 RPM / 60 GPH at 3450 RPM	50 GPH at 1725 RPM / 120 GPH at 3450 RPM

Model	Rotation & Nozzle location	Rated pressure	Flow rate @rated pressure (34 SSU)	Flow rate @rated pressure (1000 SSU)
2V022C-5DO20	LH-LH	300 PSI	20 GPH at 1725 RPM / 60 GPH at 3450 RPM	50 GPH at 1725 RPM / 120 GPH at 3450 RPM
2V023C-5DM20	LH-LH	300 PSI	40 GPH at 1725 RPM / 105 GPH at 3450 RPM	80 GPH at 1725 RPM / 185 GPH at 3450 RPM
2V023C-5DO20	LH-LH	300 PSI	40 GPH at 1725 RPM / 105 GPH at 3450 RPM	80 GPH at 1725 RPM / 185 GPH at 3450 RPM
2V023D-5DO20	RH-RH	300 PSI	40 GPH at 1725 RPM / 105 GPH at 3450 RPM	80 GPH at 1725 RPM / 185 GPH at 3450 RPM
2V024C-5DM20	LH-LH	300 PSI	60 GPH at 1725 RPM	110 GPH at 1725 RPM
2V026C-5DM20	LH-LH	300 PSI	95 GPH at 1725 RPM	155 GPH at 1725 RPM
2V026C-5DO20	LH-LH	300 PSI	95 GPH at 1725 RPM	155 GPH at 1725 RPM
2V026D-5DO20	RH-RH	300 PSI	95 GPH at 1725 RPM	155 GPH at 1725 RPM
2V086C-5DO4	LH-LH	80 PSI	135 GPH at 1725 RPM	190 GPH at 1725 RPM
2V086D-5DM4	RH-RH	80 PSI	135 GPH at 1725 RPM	190 GPH at 1725 RPM
2V086D-5DO4	RH-RH	80 PSI	135 GPH at 1725 RPM	190 GPH at 1725 RPM

OIL PUMP TYPE TA
for Fuel oil #2 to #6 applications

TA

TA - US - Ed.4 - June 2019

This is a general specification leaflet ; for specific applications not covered herein, contact Suntec.

The SUNTEC **TA** oil pump is specially designed for industrial heating applications using fuel oil #2 to #6. It is fitted with a preheater location to render cold starting easier.

APPLICATIONS

- Fuel oil #2 to #6 (for lighter oil and kerosene applications, contact SUNTEC), B6-B100 (blends from 6% up to 100% biodiesel, per ASTM D396).
- One or two-pipe system.

PUMP OPERATING PRINCIPLE

The gear set draws oil from the tank and transfers it to the valve regulating the oil pressure to the nozzle line. All oil which does not go through the nozzle line will be dumped through the valve back to the return line in two pipe installation or, if it is a one-pipe installation, back to the gear-set.

Bleed :

The plug of the pressure gauge port must be loosened until the air is evacuated from the system.

Note :

All TA models are delivered for two-pipe system (by-pass plug fitted in vacuum gauge port).

For one-pipe system, the by-pass plug must be removed and the return port sealed by steel plug and washer.

PREHEATING FACILITY

Care should be taken to avoid starting pump with high viscosity cold oil leading to pump and coupling damage. For this reason, the TA pump body includes a cavity to accept an electric preheater. This cavity has been located to give maximum heat transfer from the heater to the oil in the pump without direct contact between the heater cartridge and the oil.

Heaters should be connected for a period of time prior to starting the pump. When the right temperature is reached, they can be switched off or left permanently switched on to maintain fluid oil in the pump during the periodic burner shut-downs.

The oil supply, pipes and filters must be separately heated.

PUMP IDENTIFICATION

(Not all model combinations are available Consult your Suntec representative)

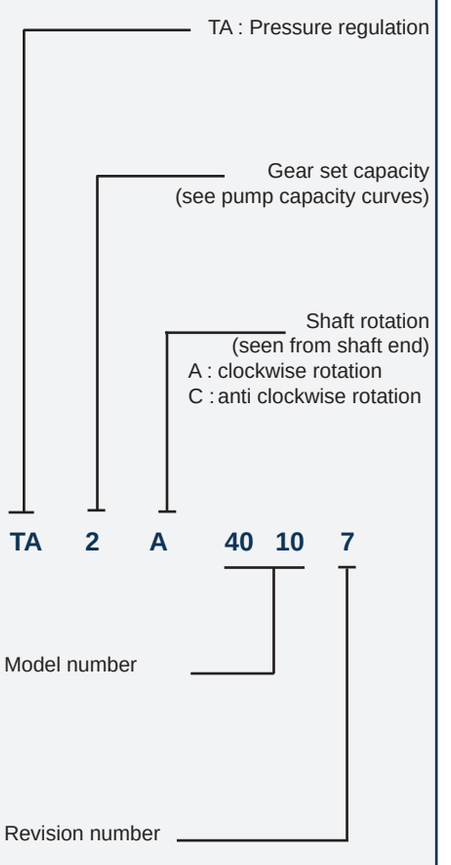

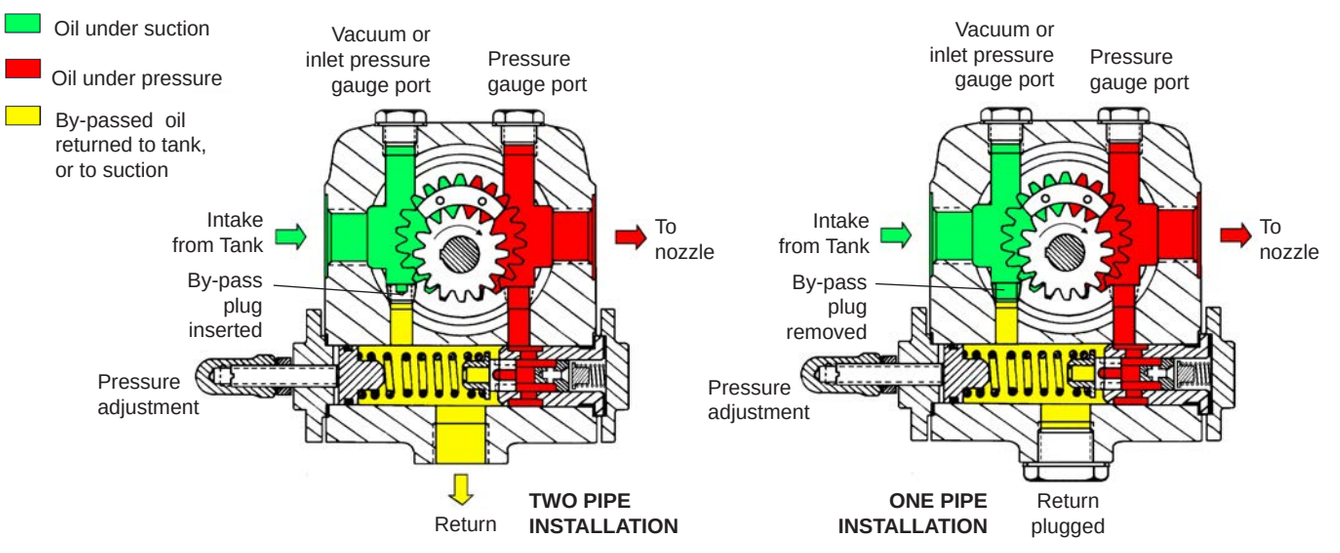

Suntec Industries Incorporated - 60 Aberdeen Drive - Glasgow, KY 42141 - USA
Tel : 270 651 7116 - Fax : 270 651 9276 - Mail : info@suntecpumps.com - www.suntecpumps.com

TECHNICAL DATA

General

Mounting	Flange mounting	
Connection threads	Cylindrical according to ISO 228/1	Conical
Inlet and return	G 1/2	1/2 NPTF
Nozzle outlet	G 1/2	1/2 NPTF
Pressure gauge port	G 1/4	1/4 NPTF
Vacuum gauge port	G 1/4	1/4 NPTF
Shaft	Ø 12 mm	
By-pass plug	Inserted in vacuum gauge port for 2 pipe system; to be removed with a 3/16" Allen key for 1 pipe system	
Weight	11,9 lbs (TAR2) 13,2 lbs (TAR4)	12,6 lbs (TAR3) 14,1 lbs (TAR5)

Choice of heater

Cartridge	Ø 12 mm
Fitting	according to EN 50262
Rating	80-100 W

Hydraulic data

Nozzle pressure range*	@ 2,4 cSt	@75 cst
TAR 2/3/4:	100-350 psi	100-580 psi
TAR 5:	100-350 psi	100-435 psi

** : optional pressure range = 30 - 100 psi, contact SUNTEC*

Delivery pressure setting	435 psi
Operating viscosity**	2,4 - 75 mm²/s (cSt)

***: for viscosity lower than 2 cSt, the maximum pressure has to be reduced to 290 psi for TAR2/3/4 and 245 psi for TAR5*

Oil temperature	32 - 302°F in the pump
Inlet pressure	6,5 psi max. vacuum to prevent air separation from oil Inlet feed pressure : 75 psi max.
Return pressure	75 psi max.
Rated speed	3600 rpm max.
Torque (@ 40 rpm)	0.3 N.m

Pump capacity

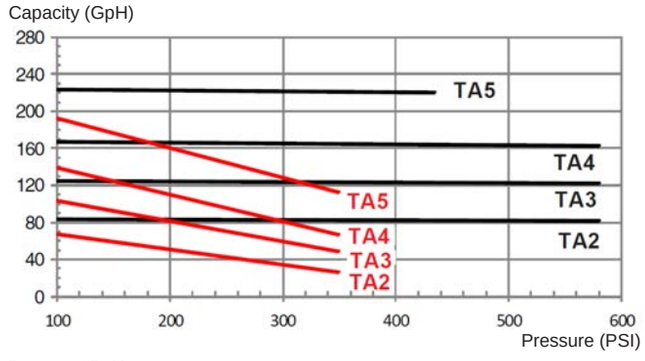

Rated speed : 1725 rpm

Viscosity :
75 cSt
2,4 cSt

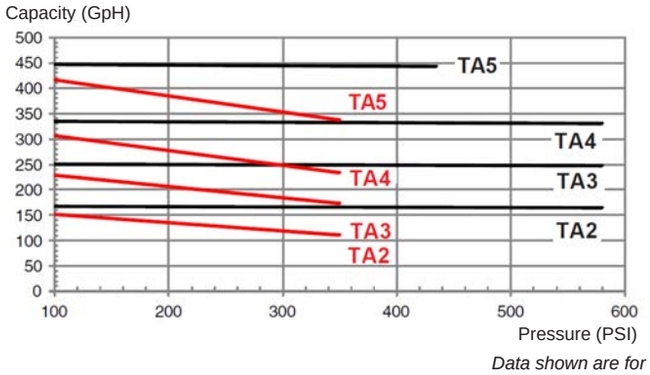

Rated speed : 3450 rpm

Viscosity :
75 cSt
2,4 cSt

Power consumption

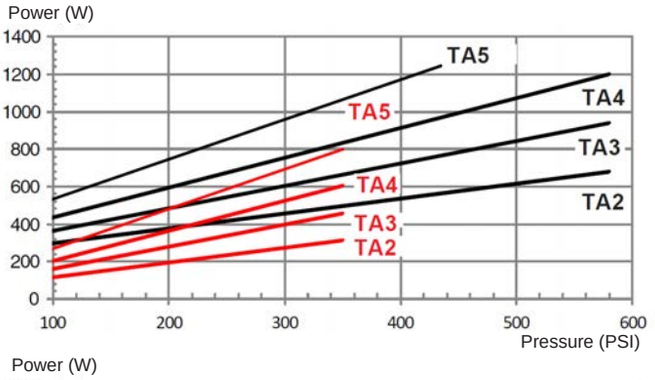

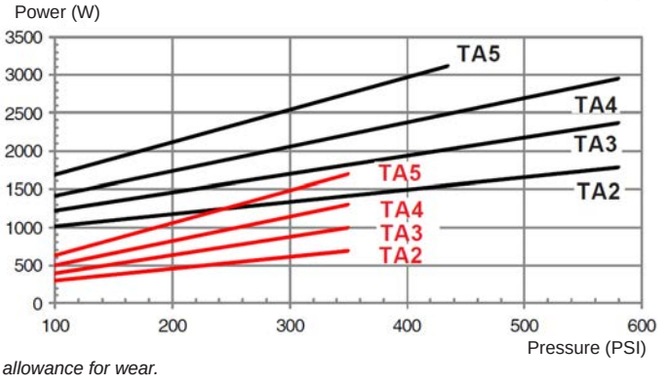

Data shown are for new pumps, with no allowance for wear.

PUMP DIMENSIONS *(in mm)*

Example shows pump with "C" rotation - Reverse all pump connections for "A" rotation.

	TA2	TA3	TA4	TA5
A (mm)	50	54	58	64

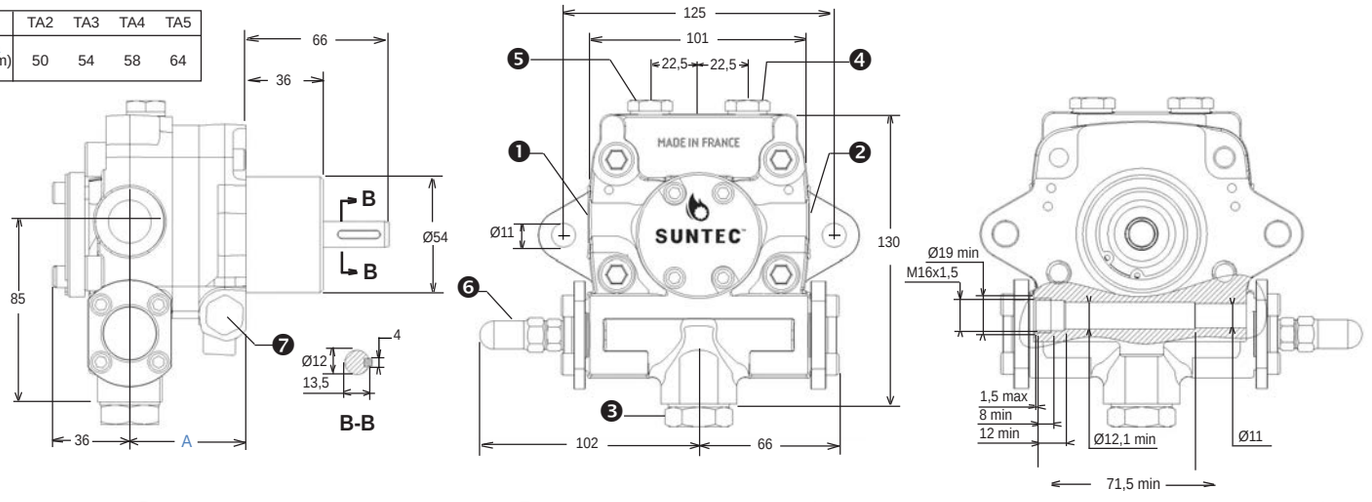

❶ Suction ❷ Nozzle outlet ❸ Return ❹ Pressure gauge port ❺ Vacuum or inlet pressure gauge port and internal by-pass plug ❻ Pressure adjustment ❼ Preheater cavity

SUNTEC™

OIL PUMP TYPE TAR
for Marine Residual Fuels applications

TAR

TAR - US - Ed.5 - Nov 2024

This is a general specification leaflet ; for specific applications not covered herein, contact Suntec.

Designed from the well known TA pump range, the SUNTEC **TAR** oil pump is specially designed for industrial heating applications using Marine Residual Fuels (as defined in ISO 8217 standard). **TAR** pump offer superior resistance to wear and improved pump life for abrasive fuels applications.

APPLICATIONS

- Marine Residual Fuels (RMG).
- Fuel oil #3 to #6, B6-B100 (blends from 6% up to 100% biodiesel, per ASTM D396).
- Marine Distillate Fuels applications possible.
- One or two-pipe system.

PUMP OPERATING PRINCIPLE

The gear set draws oil from the tank and transfers it to the valve regulating the oil pressure to the nozzle line. All oil which does not go through the nozzle line will be dumped through the valve back to the return line in two pipe installation or, if it is a one-pipe installation, back to the gear-set.

Bleed :

The plug of the pressure gauge port must be loosened until the air is evacuated from the system.

Note :

All TAR models are delivered for two-pipe system (by-pass plug fitted in vacuum gauge port).

For one-pipe system, the by-pass plug must be removed and the return port sealed by steel plug and washer.

PREHEATING FACILITY

Care should be taken to avoid starting pump with high viscosity cold oil leading to pump and coupling damage. For this reason, the TAR pump body includes a cavity to accept an electric preheater. This cavity has been located to give maximum heat transfer from the heater to the oil in the pump without direct contact between the heater cartridge and the oil.

Heaters should be connected for a period of time prior to starting the pump. When the right temperature is reached, they can be switched off or left permanently switched on to maintain fluid oil in the pump during the periodic burner shut-downs.

The oil supply, pipes and filters must be separately heated.

PUMP IDENTIFICATION

(Not all model combinations are available
Consult your Suntec representative)

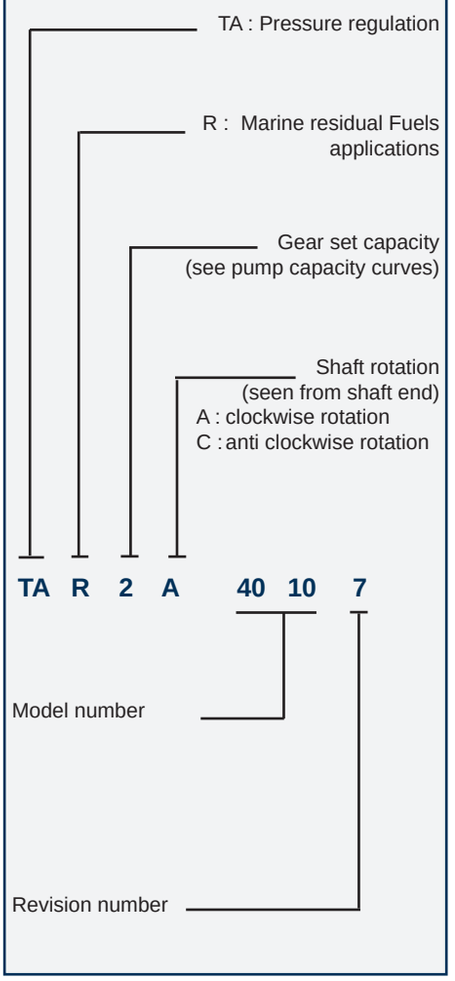

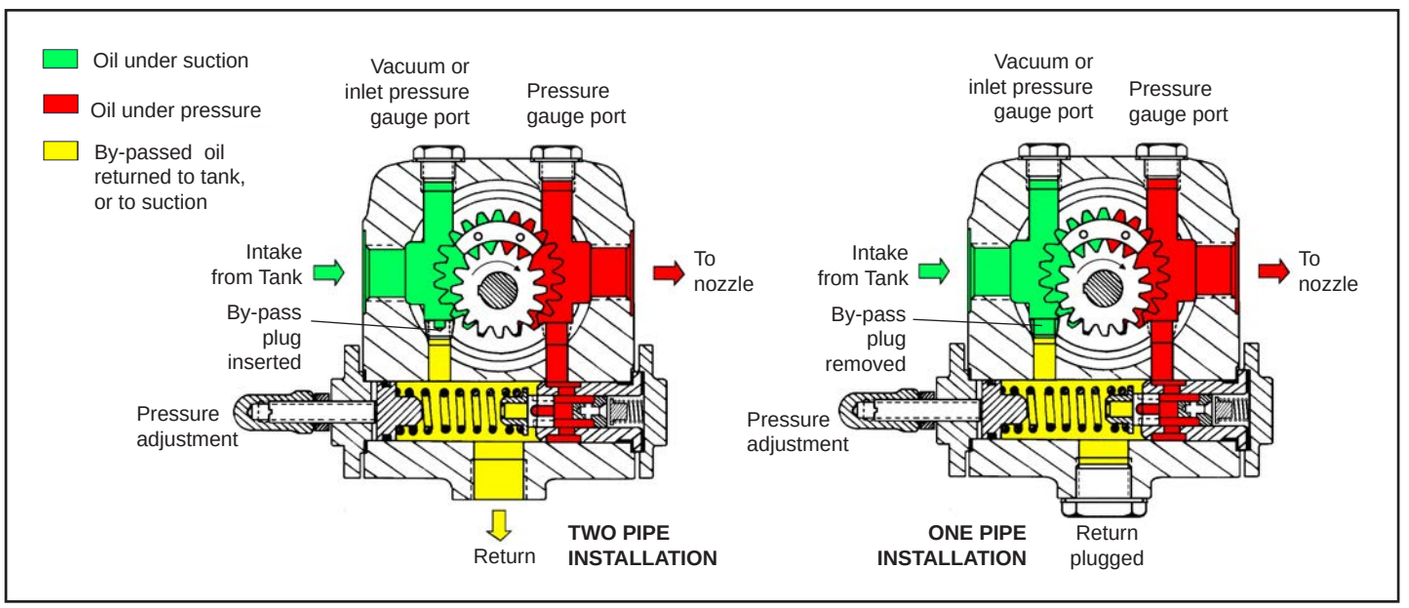

Suntec Industries Incorporated - 60 Aberdeen Drive - Glasgow, KY 42141 - USA
Tel : 270 651 7116 - Fax : 270 651 9276 - Mail : info@suntecpumps.com - www.suntecpumps.com

TECHNICAL DATA

General

Mounting	Flange mounting	
Connection threads	Cylindrical according to ISO 228/1	Conical
Inlet and return	G 1/2	1/2 NPTF
Nozzle outlet	G 1/2	1/2 NPTF
Pressure gauge port	G 1/4	1/4 NPTF
Vacuum gauge port	G 1/4	1/4 NPTF
Shaft	Ø 12 mm	
By-pass plug	Inserted in vacuum gauge port for 2 pipe system; to be removed with a 3/16" Allen key for 1 pipe system	
Weight	11,9 lbs (TAR2) 13,2 lbs (TAR4)	12,6 lbs (TAR3) 14,1 lbs (TAR5)

Choice of heater

Cartridge	Ø 12 mm
Fitting	according to EN 50262
Rating	80-100 W

Hydraulic data

Nozzle pressure range*	@ 2 cSt	@75 cst
TAR 2/3/4:	100-350 psi	100-580 psi
TAR 5:	100-350 psi	100-435 psi

** : optional pressure range = 30 - 100 psi, contact SUNTEC*

Delivery pressure setting	435 psi
Operating viscosity**	1,25 - 75 mm²/s (cSt)

***: for viscosity lower than 2 cSt, the maximum pressure has to be reduced to 290 psi for TAR2/3/4 and 245 psi for TAR5*

Oil temperature	32 - 302°F in the pump
Inlet pressure	6,5 psi max. vacuum to prevent air separation from oil Inlet feed pressure : 75 psi max.
Return pressure	75 psi max.
Rated speed	3600 rpm max.
Torque (@ 40 rpm)	0.3 N.m

Pump capacity

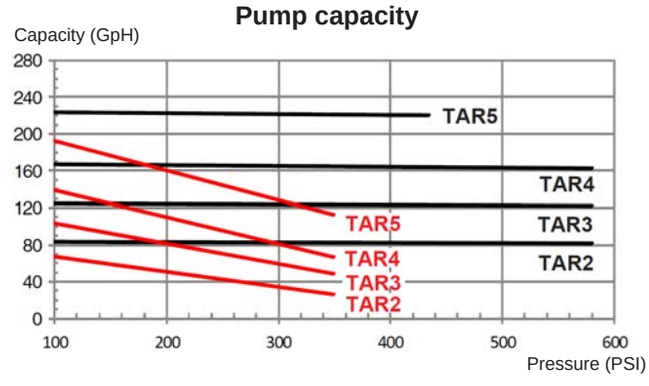

Rated speed : 1725 rpm

Viscosity :
75 cSt
2,4 cSt

Power consumption

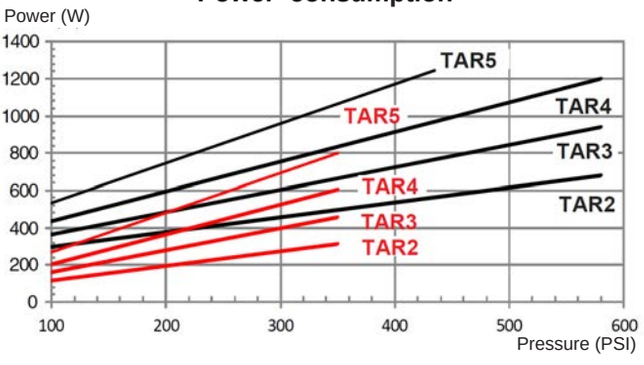

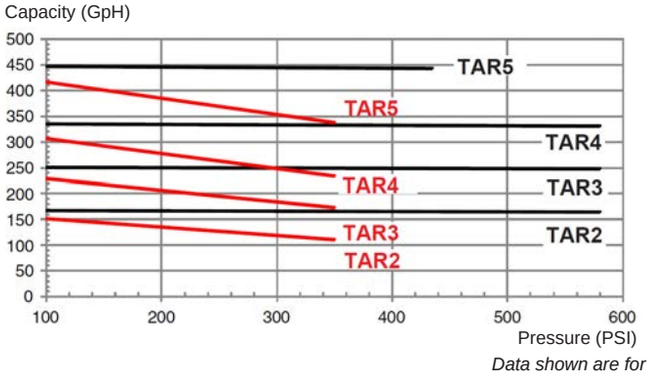

Rated speed : 3450 rpm

Viscosity :
75 cSt
2,4 cSt

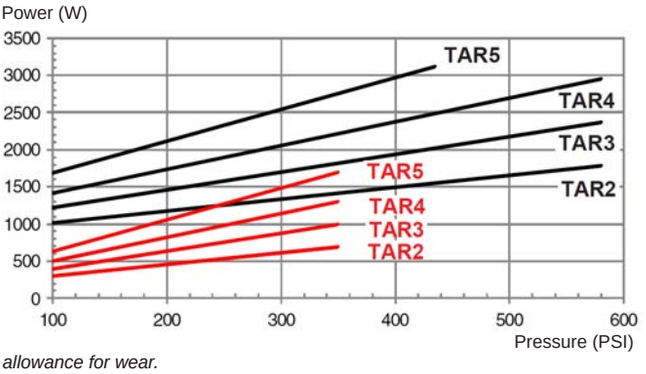

Data shown are for new pumps, with no allowance for wear.

PUMP DIMENSIONS *(in mm)*

Example shows pump with "C" rotation - Reverse all pump connections for "A" rotation.

	TAR2	TAR3	TAR4	TAR5
A (mm)	50	54	58	64

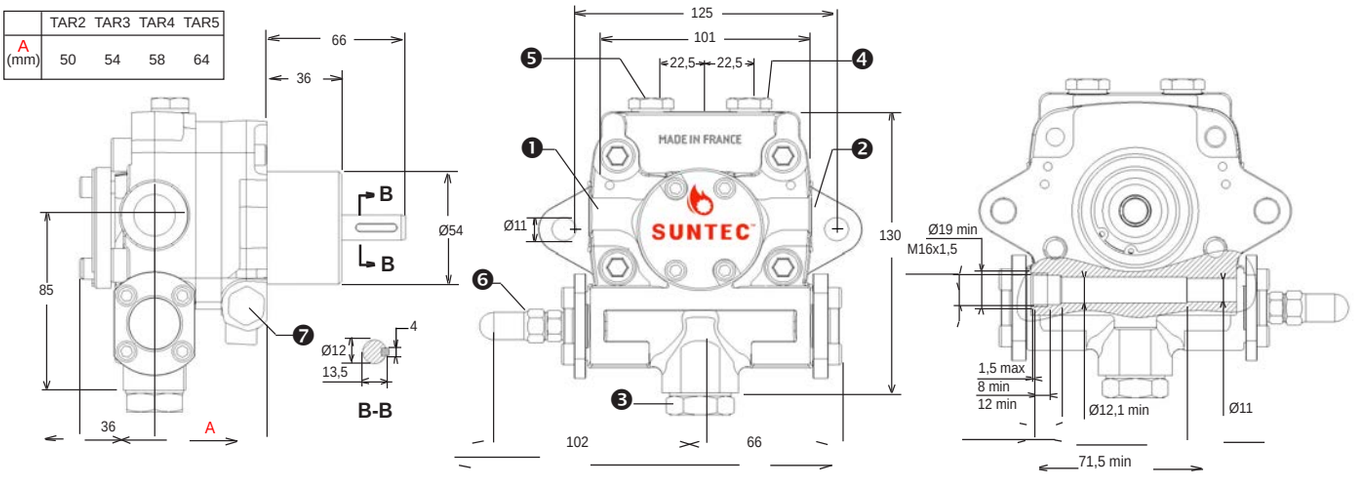

❶ Suction ❷ Nozzle outlet ❸ Return ❹ Pressure gauge port ❺ Vacuum or inlet pressure gauge port and internal by-pass plug ❻ Pressure adjustment ❼ Preheater cavity

OIL PUMP TYPE T
for Fuel oil #2 to #6 applications

T

T - US - Ed.5 - Nov 2024

This is a general specification leaflet ; for specific applications not covered herein, contact Suntec.

The SUNTEC **T** oil pump is specially designed for industrial heating applications using fuel oil #2 to #6 with high capacity. It is fitted with a preheater location to render cold starting easier.

APPLICATIONS

- Fuel oil #2 to #6 (for lighter oil and kerosene applications, contact SUNTEC), B6-B100 (blends from 6% up to 100% biodiesel, per ASTM D396).
- The use of a SUNTEC TV valve is recommended to regulate the pump pressure.

PUMP OPERATING PRINCIPLE

The gear set draws oil from the tank and transfers it to an external valve that regulates the oil pressure.

Bleed :

The plug of the pressure gauge port must be loosened until the air is evacuated from the system.

Note :

The bypass plug inserted between high pressure and shaft seal is only intended to change the pump rotation, check the presence of this plug with a 4 mm Allen key in the pressure outlet of the pump.
Caution : changing the direction of pump rotation involves changing all pump connections.

PREHEATING FACILITY

Care should be taken to avoid starting pump with high viscosity cold oil leading to pump and coupling damage. For this reason, the T pump body includes a cavity to accept an electric preheater. This cavity has been located to give maximum heat transfer from the heater to the oil in the pump without direct contact between the heater cartridge and the oil.

Heaters should be connected for a period of time prior to starting the pump. When the right temperature is reached, they can be switched off or left permanently switched on to maintain fluid oil in the pump during the periodic burner shut-downs.

The oil supply, pipes and filters must be separately heated.

PUMP IDENTIFICATION

(Not all model combinations are available Consult your Suntec representative)

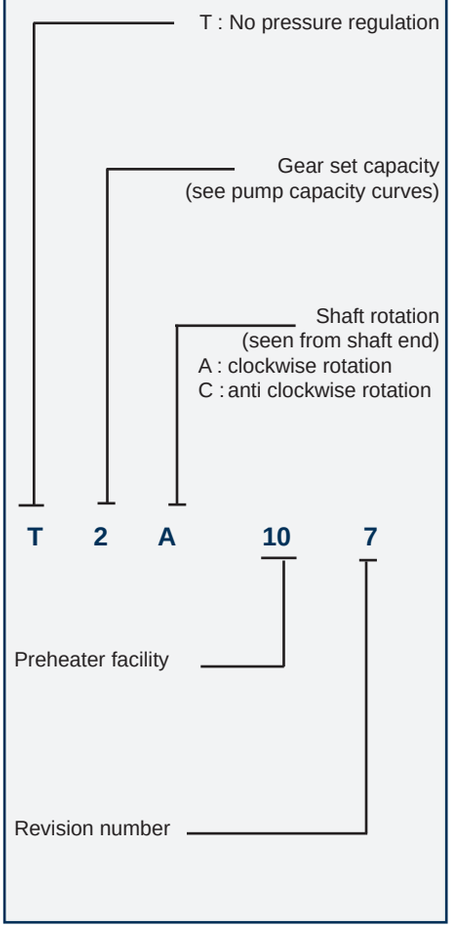

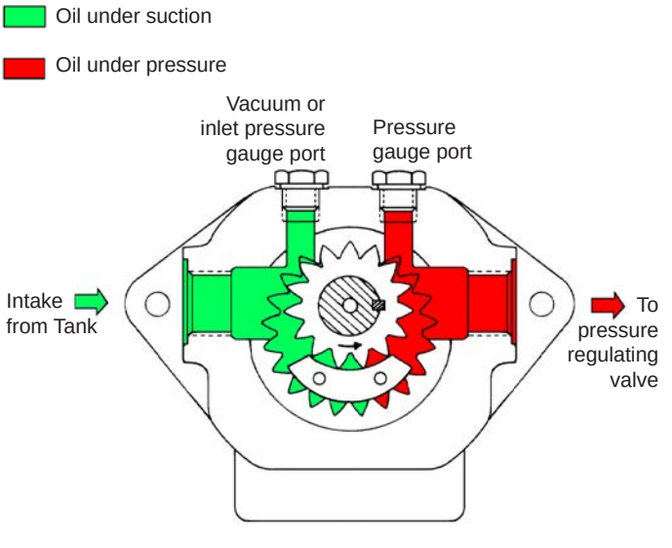

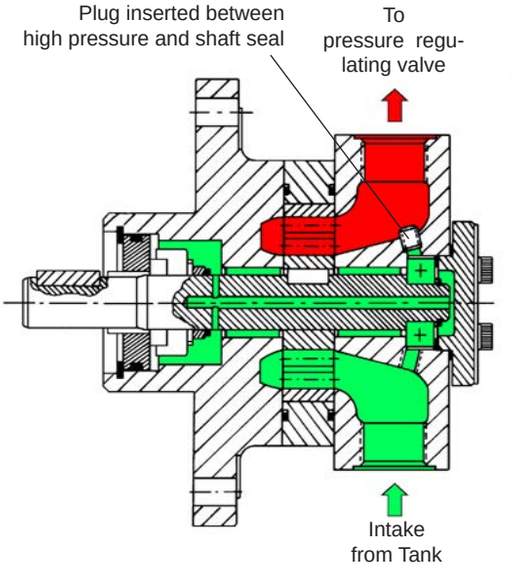

Suntec Industries Incorporated - 60 Aberdeen Drive - Glasgow, KY 42141 - USA
Tel : 270 651 7116 - Fax : 270 651 9276 - Mail : info@suntecpumps.com - www.suntecpumps.com

TECHNICAL DATA

General

Mounting	Flange mounting	
Connection threads Inlet and return Nozzle outlet Pressure gauge port Vacuum gauge port	Cylindrical according to ISO 228/1 G 3/4 G 3/4 G 1/4 G 1/4	
Shaft	Ø 20 mm	
Weight	17,2 lbs (T 2) 19,2 lbs (T 4)	7,9 lbs (T 3) 20,7 lbs (T 5)

Choice of heater

Cartridge	Ø 12 mm
Fitting	according to EN 50262
Rating	80-100 W

Hydraulic data

Nozzle pressure range	@ 2,4 cSt	@75 cst
T 2/3/4:	max 350 psi max	max 580 psi max
T 5:	max 350 psi max	max 435 psi max
Operating viscosity**	2,4 - 75 mm²/s (cSt)	

***: Higher viscosity oil can be used byfeeding the pump and by heating the oil to lower its viscosity under 75 cSt. For kerosene applications, contact SUNTEC*

Oil temperature	32 - 302°F in the pump
Inlet pressure	6,5 psi max. vacuum to prevent air separation from oil Inlet feed pressure : 75 psi max.
Rated speed	3600 rpm max.
Torque (@ 40 rpm)	0.40 N.m

Pump capacity

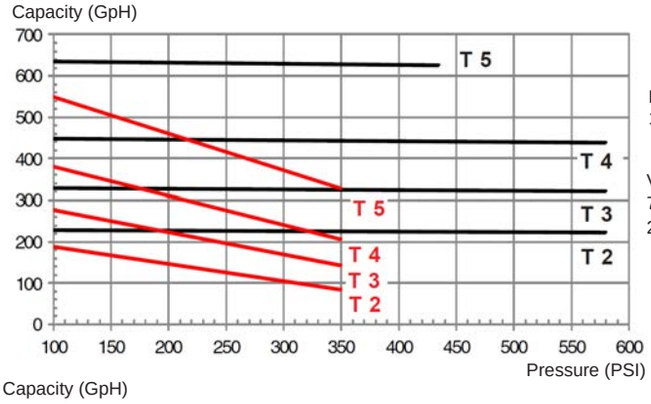

Rated speed : 1725 rpm

Viscosity :
75 cSt
2,4 cSt

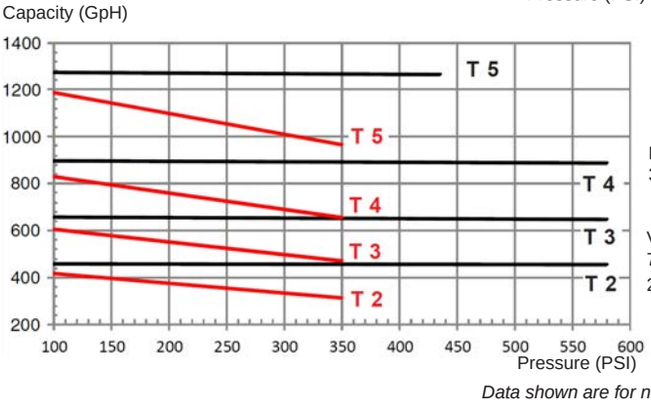

Rated speed : 3450 rpm

Viscosity :
75 cSt
2,4 cSt

Power consumption

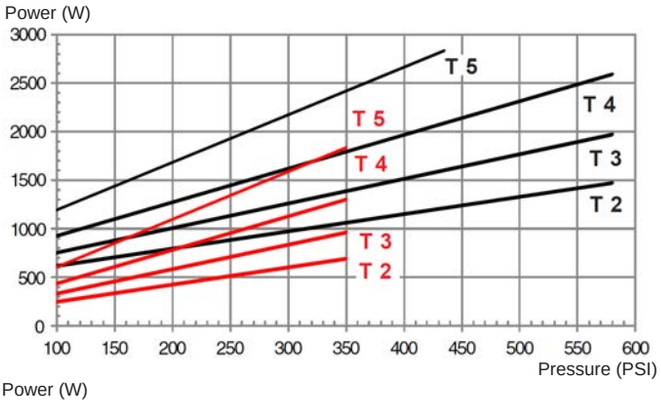

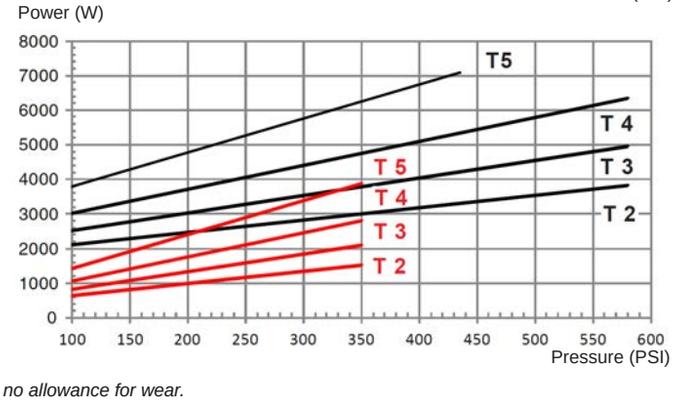

Data shown are for new pumps, with no allowance for wear.

PUMP DIMENSIONS *(in mm)*

Example shows pump with "A" rotation - Reverse all pump connections for "C" rotation.

	T2	T3	T4	T5
A (mm)	68	73	78	87

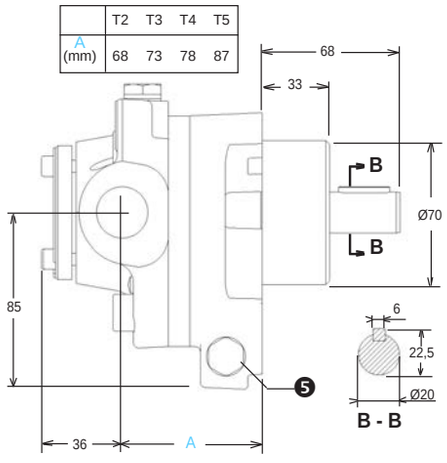

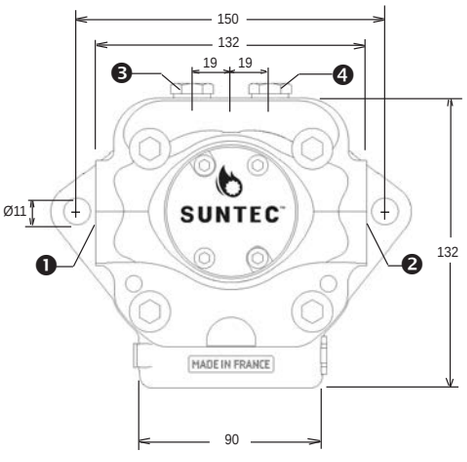

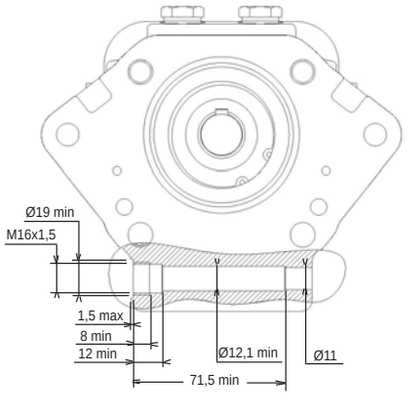

❶ Suction

❷ Pressure outlet and internal by-pass plug

❸ Vacuum or inlet pressure gauge port

❹ Pressure gauge port

❺ Preheater cavity

TV VALVE

TV

TV - US - Ed.4 - November 2024

This is a general specification leaflet ; for specific applications not covered herein, contact Suntec.

The SUNTEC **TV** valve is a pressure regulating valve.

APPLICATIONS

- Fuel oil #2 to #6, B6-B100 (blends from 6% up to 100% biodiesel, per ASTM D396).
- Capacity up to 1300 GpH.
- May be used with the SUNTEC **T** pump.

VALVE OPERATING PRINCIPLE

The pressure of the nozzle line is adjusted with the adjusting screw of the TV valve. The oil in excess to nozzle requirement is dumped to the return.

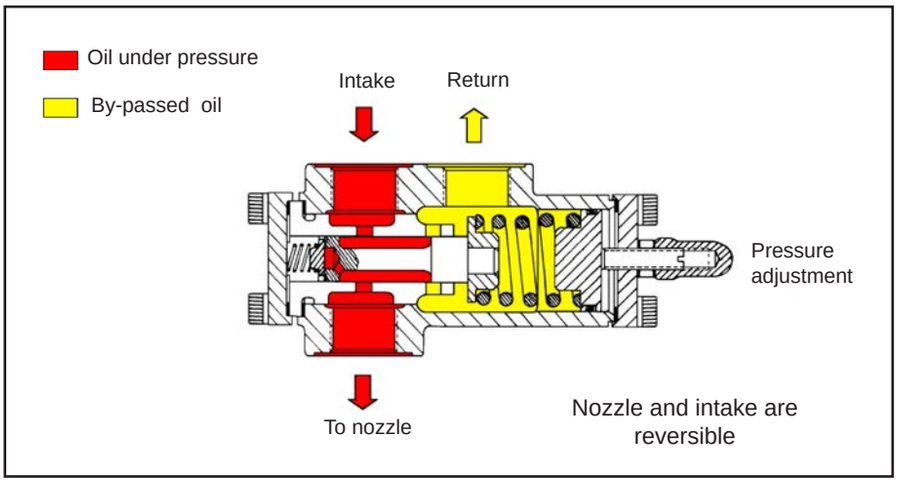

VALVE IDENTIFICATION

(Not all model combinations are available Consult your Suntec representative)

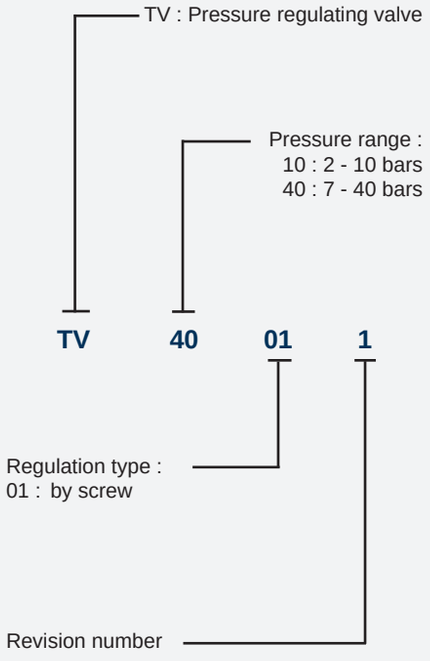

INSTALLATION

Two pipe system : oil in excess is returned to tank.

One pipe system : oil in excess is returned to pump suction.

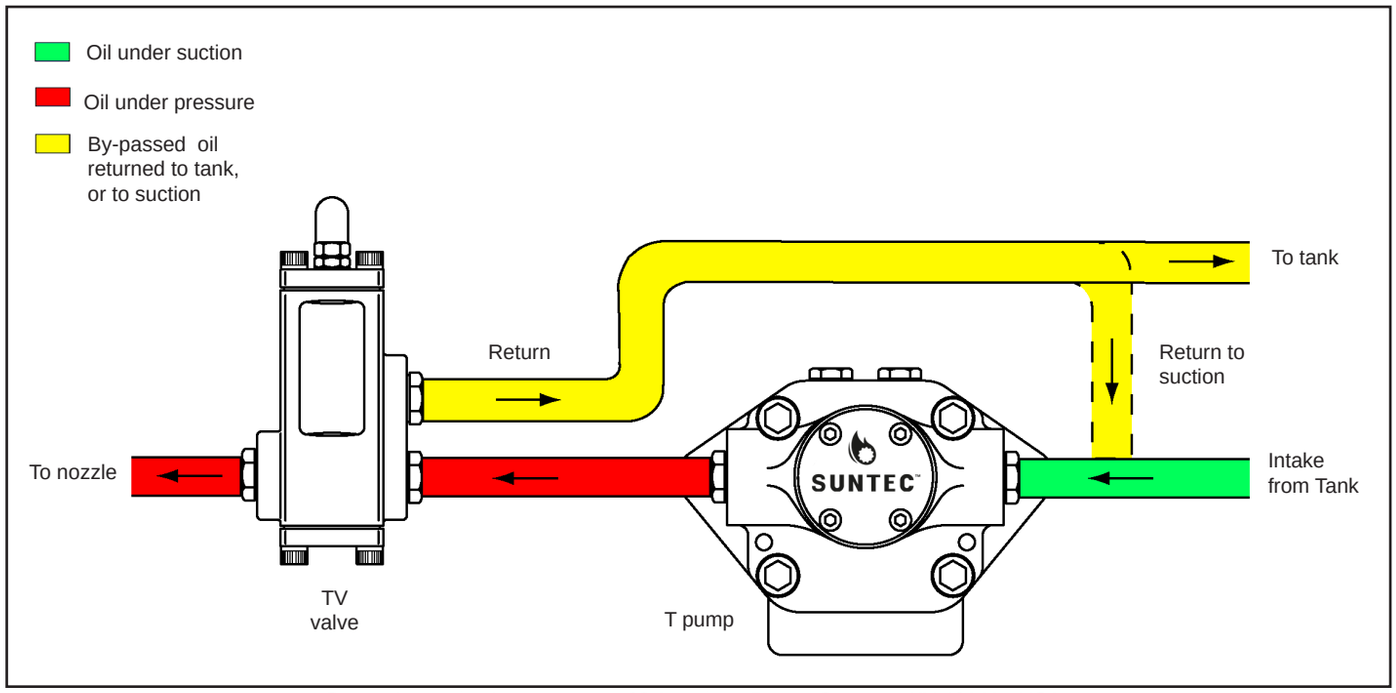

Suntec Industries Incorporated - 60 Aberdeen Drive - Glasgow, KY 42141 - USA
Tel : 270 651 7116 - www.suntecpumps.com

TECHNICAL DATA

General

Connection threads	Cylindrical according to ISO 228/1
Inlet	G 3/4
Nozzle outlet	G 3/4
Return	G 3/4
Weight	6,6 lBs

Hydraulic data

Pressure ranges	10 : 30 - 145 psi (delivery pressure setting : 100 psi) 40 : 100 - 580 psi (delivery pressure setting : 290 psi)
Operating viscosity**	2,4 - 75 mm²/s (cSt) *(Higher viscosity oil can be used by heating the oil to lower its viscosity under 75 cSt)*
Oil temperature	32 - 302°F max in the valve

MOUNTING POSITION

TV valve may be mounted in any position.

PRESSURE ADJUSTMENT

Remove cap-nut ❶ and washer ❷, unscrew lock-nut ❹.

To increase pressure, turn adjusting screw ❸ clockwise.

To decrease the pressure, turn screw anticlockwise.

Block lock-nut ❹, refasten washer ❷ and cap-nut ❶.

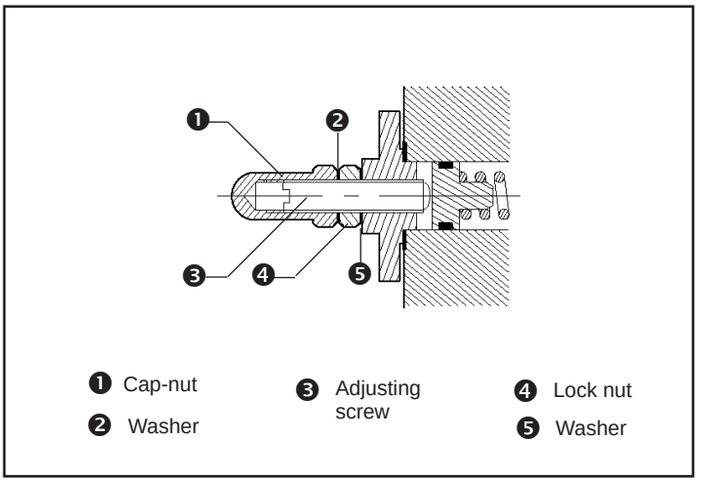

DIMENSIONS *(in mm)*

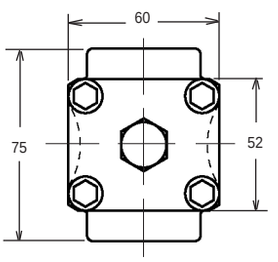

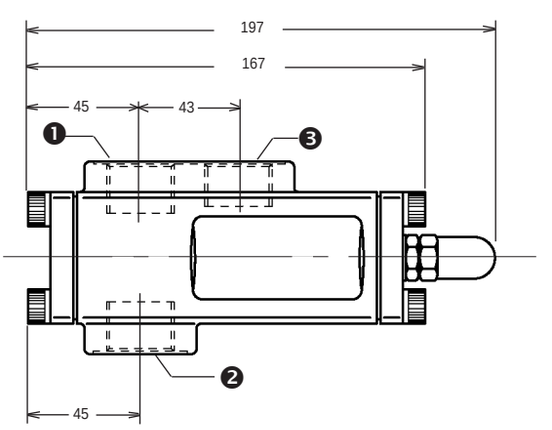

❶ Intake or nozzle outlet

❷ Nozzle outlet or intake

❸ Return

ACCESSORIES

OIL SAFETY VALVE

OSV

OSV - 11 - Ed. 2 - November 2024

Oil Safety Valves (OSV®s) valves can be used for the following applications which require slightly different installations:

- Preventing tank siphoning and oil leaks in the event of line breaks,
- Preventing excessive pressure at the inlet of the burner fuel unit, for use with a supply pump (booster pump)

Many state and local codes require a device that will automatically shut off the oil supply before it enters a building should the line between the device and the burner be broken. NFPA standards require that the pressure at the burner fuel pumps must not exceed 3 PSI. The Webster OSV satisfies both requirements when properly installed. Check local codes for any special requirements.

COMPATIBILITY

The bio OSV valve is U/L listed for biofuel and is compatible with a wide range of other fuels such as B20-B100, #1-#2 fuel oil, kerosene, diesel and waste oil.

OPERATING PRINCIPLE

Prevent oil spills

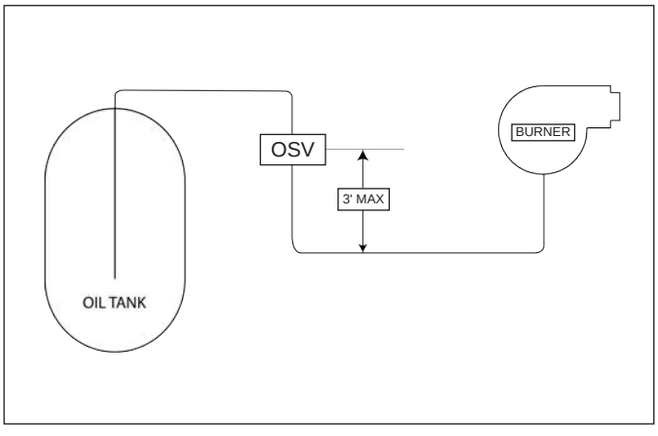

Webster OSV valves help prevent oil spills by stopping oil flow in the event of line breaks caused by corroded lines or leaky fittings. It is mounted in the supply line as close as possible to the tank. The OSV requires a vacuum on its outlet side to open the valve and allow oil flow.

When the burner is shut down, there is no vacuum from the fuel unit and the OSV valve is closed – oil flow is stopped.

When the burner starts up, vacuum from the fuel unit opens the OSV, allowing oil to flow.

If a corroded broken line or a loose fitting causes a leak to develop between the OSV and burner, air enters the line. Fuel unit vacuum is reduced and the OSV will not open, preventing tank siphoning and a major spill.

Prevent excessive pressure with a supply pump

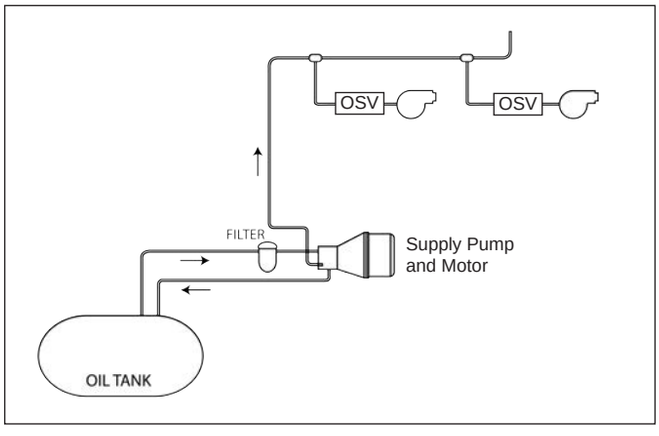

The Webster OSV provides important protection in oil burner supply systems with pressurized supply lines. By isolating burner fuel units from supply line pressure sources (a supply pump or overhead tank, for example), the OSV relieves pressure stain on fuel unit inlets and seals.

For this application, the OSV is installed close to the burner assembly. A sustained vacuum at the outlet side of the OSV, generated by fuel unit operation, causes the valve to open.

The OSV operates as a pressure reducer, with supply line pressure on the valve inlet side and fuel pump vacuum on the valve outlet side.

In systems with burners connected for one-pipe operation, GPH flow through the valve is the same as the burner nozzle firing rate.

In two-pipe operation, GPH flow through the valve is the same as the fuel unit suction capacity. Refer to fuel unit manufacturer's specification for inlet suction capacity. Operation of OSVs in parallel is not recommended.

TECHNICAL CHARACTERISTICS



Port size :

- OSV 38 : 3/8 NPTF
- OSV 50 : 1/2 NPTF

Temperature range : -40 to 140° F

Inlet pressure : 60 PSI max

Certified c UL us

Recommended Maximum flow rates and pressure :

Vacuum (inches Hg) to operate valve is shown for various flow and pressure conditions. *

	Inlet pressure					
Flow thru valve	5 PSI	15 PSI	30 PSI	40 PSI	50 PSI	60 PSI
1 gph	2.5	2.7	3.5	4.5	5.0	5.5
15 gph	2.7	3.0	4.0	5.0	5.5	6.0
32 gph	3.7	4.0	4.7	5.2	6.0	7.0
45 gph	4.0	4.5	5.0	6.0	7.0	
55 gph	4.5	5.0	5.7			
60 gph	5.0	5.2	6.0	DO NOT OPERATE IN THIS REGION		
70 gph	5.5	6.0				

* Values given are averages of test results and may vary slightly

INSTALLATION

The OSV can be mounted in any position.

In environments where dirt or moisture is particularly a problem, the preferred position is with the cover down. This allows any moisture from the diaphragm area to drain out the manual access hole.

DIMENSIONS *(in mm)*

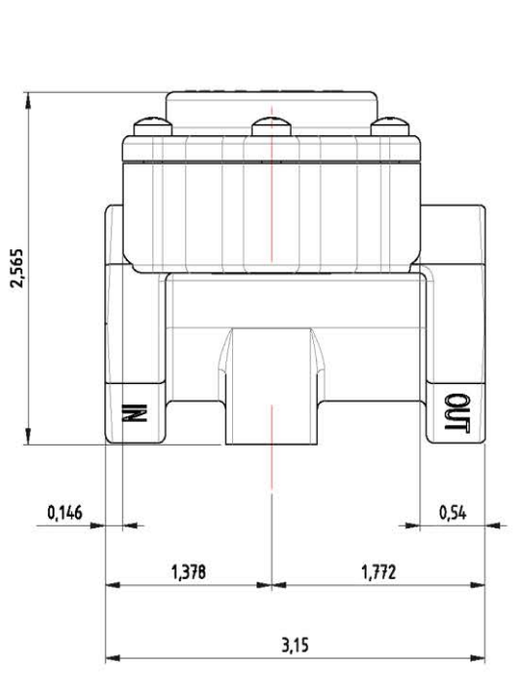

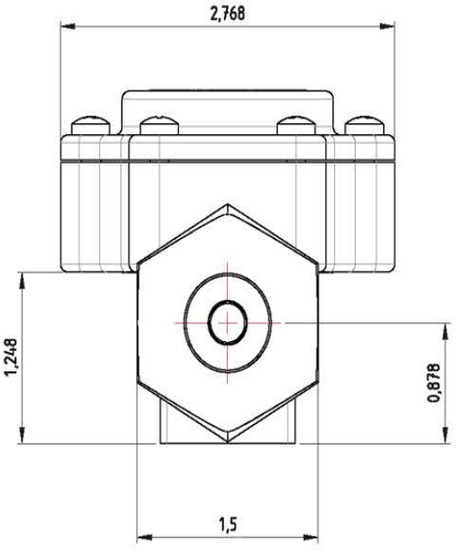

Shut-off valve

R&C valves

R&C valves - 11 - Ed. 3 - November 2024

SUNTEC drew on all of its know-how on pumps with integrated solenoid valves to develop and market a range of independent in-line solenoid valves. The R&C valves are automatic solenoid valve with direct cut-off that meets the requirements of UL certification. They are specially designed to fit burners and installations up to 3,4 MBTU.

- **Designed to perform reliably** over an extended cycle life.
- **Field proven concept**, with years of domestic and European acceptance.
- **Available in a choice** of pump mount (Model R) or burner mount (Model C). Both models use the same actuating components including the coil.
- **Economical.** A two-piece detachable coil and cordset allows greater flexibility and increased savings to customers when retro-fitting.

MODEL R - Pump mount

Easy to install : model R valve is added into the circuit with simple tools and without additional tubing. The coaxial bolt assembles the valve directly to the pump outlet.

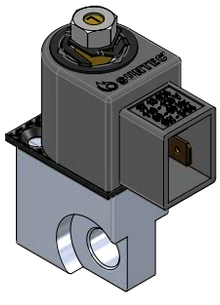

TECHNICAL CHARACTERISTICS

	R261NLB	R291NLB	R442NLB	R642NLB	R753NLB
Solenoid type	NC	NC	NC	NC	NC
Voltage	12V DC / 24V AC	12V DC / 24V AC	24V DC	110 - 120V AC	220 - 240V AC
Lead length	22,5 inch (no jacket)	39 inch (full jacket)	22,5 inch (no jacket)	22,5 inch (no jacket)	22,5 inch (no jacket)
Fluid connection	1/8 NPTF	1/8 NPTF	1/8 NPTF	1/8 NPTF	1/8 NPTF
Pressure range	0 - 300 psi				
Loss of load	< 14,5 psi for a flow rate of 16 GPH at 68°F / 5 cSt				
Nozzle line flow	16 GPH				
Oil type	Fuel oil #2 and lighter, B6-B20 (blends from 6% up to 20% biodiesel, per ASTM D396)				
Fluid temperature	75° F				
Ambiant temperature	50 - 115°F				
Body material	Aluminium				
Coil color	Green	Green	Orange	Grey	Black
Consumption	10W	10W	9W	9W	9W
Certification	c UL us				

MODEL C - Burner mount

Easy to install : Model C valve mounts onto the burner housing with convenient 90°porting. This permits a very concise tubing arrangement.

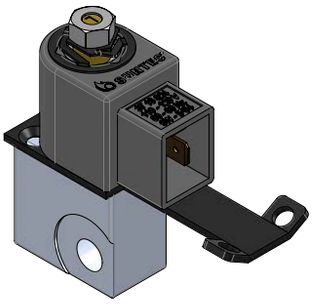

TECHNICAL CHARACTERISTICS

	C291NRB	C642NRB	C692NRB	C753NRB	C793NRB
Solenoid type	NC	NC	NC	NC	NC
Voltage	12V DC / 24V AC	110 - 120V AC	110 - 120V AC	220 - 240V AC	220 - 240V AC
Lead length	39 inch (full jacket)	22,5 inch (no jacket)	39 inch (full jacket)	22,5 inch (no jacket)	39 inch (full jacket)
Fluid connection	1/8 NPTF	1/8 NPTF	1/8 NPTF	1/8 NPTF	1/8 NPTF
Pressure range	0 - 300 psi				
Loss of load	< 14,5 psi for a flow rate of 16 GPH at 68°F / 5 cSt				
Nozzle line flow	16 GPH				
Oil type	Fuel oil #2 and lighter, B6-B20 (blends from 6% up to 20% biodiesel, per ASTM D396)				
Fluid temperature	75° F				
Ambiant temperature	50 - 115°F				
Body material	Aluminium				
Coil color	Green	Grey	Grey	Black	Black
Consumption	10W	9W	9W	9W	9W
Certification	c UL us				

INSTALLATION

The shut-off valve can be installed on any Suntec model series A and B pumps rated up to 300 psi.
All permissible mounting positions, except for downward pointing solenoid tube.

DIMENSIONS *(in inches)*

R valve

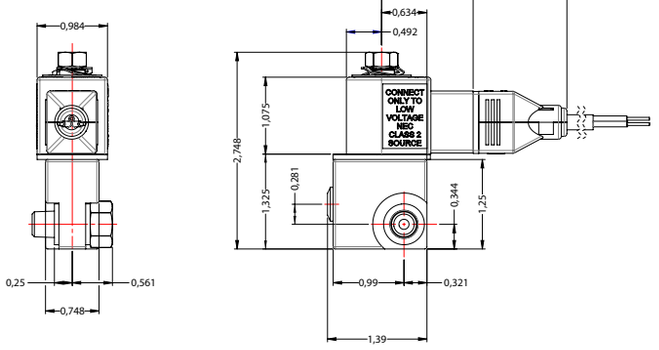

C valve

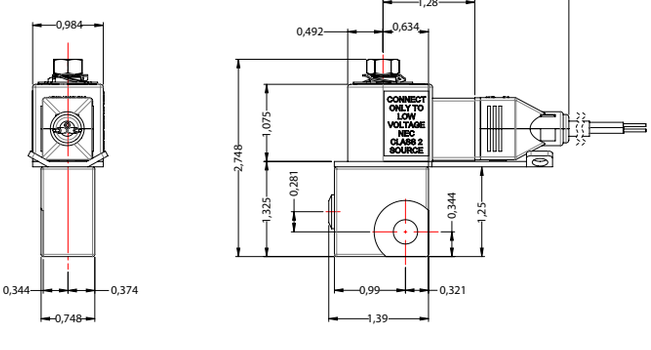

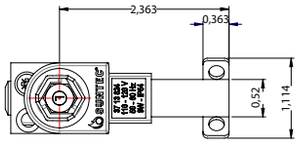

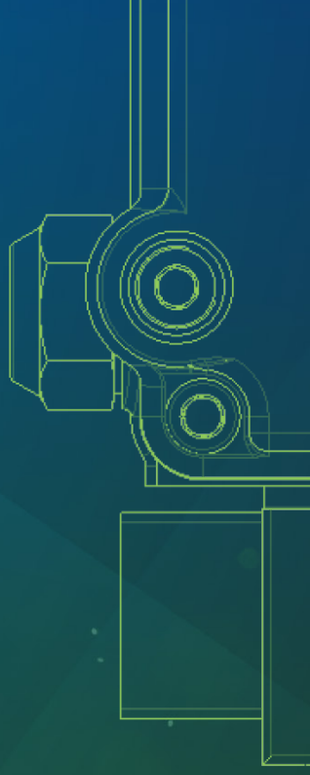

SUNTEC™

SUNTEC INDUSTRIES Incorporated
60 Aberdeen Drive
Glasgow, KY 42141
☎ : +1 270 404 0254
✉ : info@suntecpumps.com
www.suntecpumps.com

SUNTEC INDUSTRIES France
1 rue Lavoisier - CS 60102
F-21603 Longvic Cedex
☎ : +33 (0)3 80 70 60 70
✉ : information@suntec.fr
www.suntec.fr

© ALL RIGHTS RESERVED - SUNTEC INDUSTRIES FRANCE SAS - JANUARY 2025