Multifunctional Gas Valve M2-C

Combination Gas valve with 2 safety valves and pressure regulator

Applications

Light commercial 1 stage pressure jet burners up to 120kW

M2-C

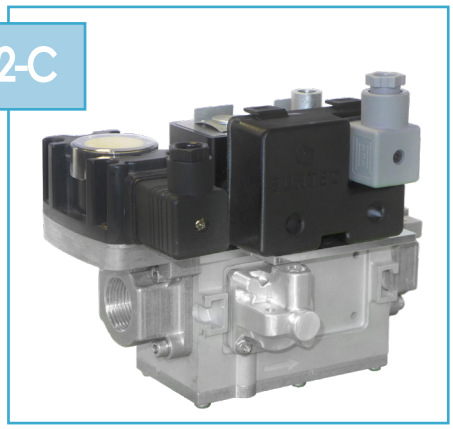

Specifications

- Combination gas valve according to EN 126:2012
  - 2 Safety Shut-off valves according to EN 161 :
    Class A, closing time < 1 s.
    Direct ON/OFF operators
  - Pressure regulator (according to EN 88-1) :
    Constant pressure regulator class A
    Adjustable set point range : 4-20 mbar
    Normally closed regulating valve
- Gas Families : I + II + III according to EN 437
- Maximum inlet pressure : 360 mbar
- Inlet/outlet flanges : 1/2'', 3/4''
- Integrated inlet strainer
- Housing : *Aluminum*
- Ambient temperature range :
  -20 °C to +60 °C

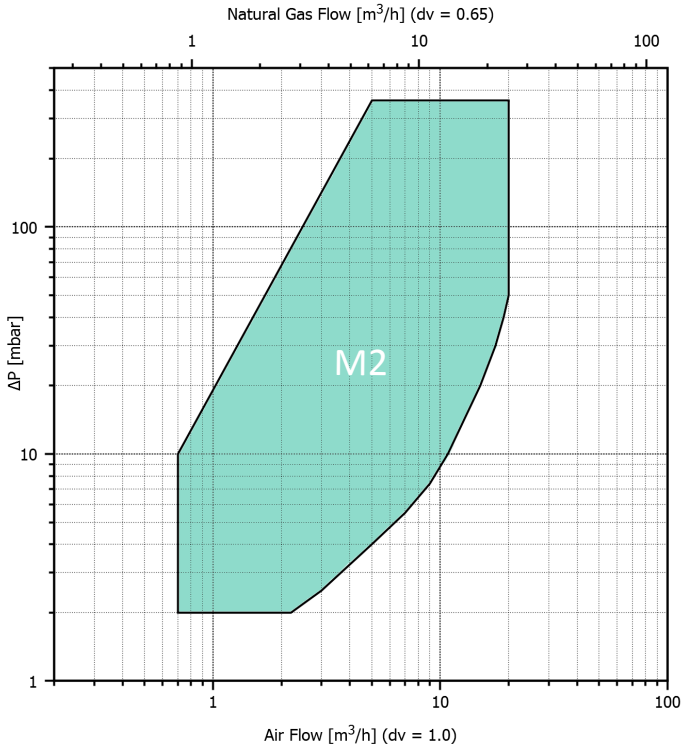

P burner = 3mbar

M2-C - 11 - Ed.3 - March 2018

Suntec Industries France -1, rue Lavoisier - CS 60102 - F-21603 LONGVIC Cedex
Tel : +33 (0)3 80 70 60 70 - Fax : +33 (0)3 80 70 61 11 - Mail : information@suntec.fr - www.suntec.fr

Multifunctional Gas Valve M2-C

Electrical features

- Rated voltage : 230V AC - 50/60 Hz
- Independent power supply of shut-off valve
- Electrical connection : Standard ISO 4400/DIN 43650 Form A plug connector
- Protection : IP 54, with suitable plug

Options

Flow control

- Flow limiter
- Slow opening

Accessories

- Inlet/outlet flanges ISO 7.1 threaded (straight or 90° bend)
- Fine replaceable gas filter
- Minimum pressure switch

Operating Principle

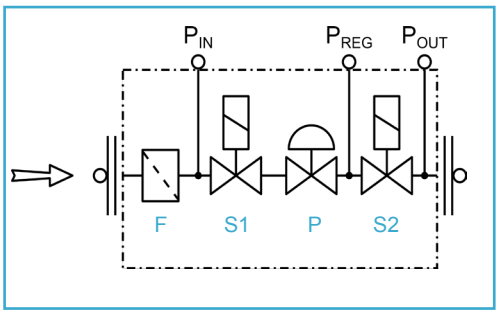

P IN : inlet pressure

P REG : regulated pressure

P OUT : outlet pressure

F : strainer

P : pressure regulator

S1 : safety shut-off valve

S2 : safety shut-off valve with flow limiter or slow opening

Dimensions

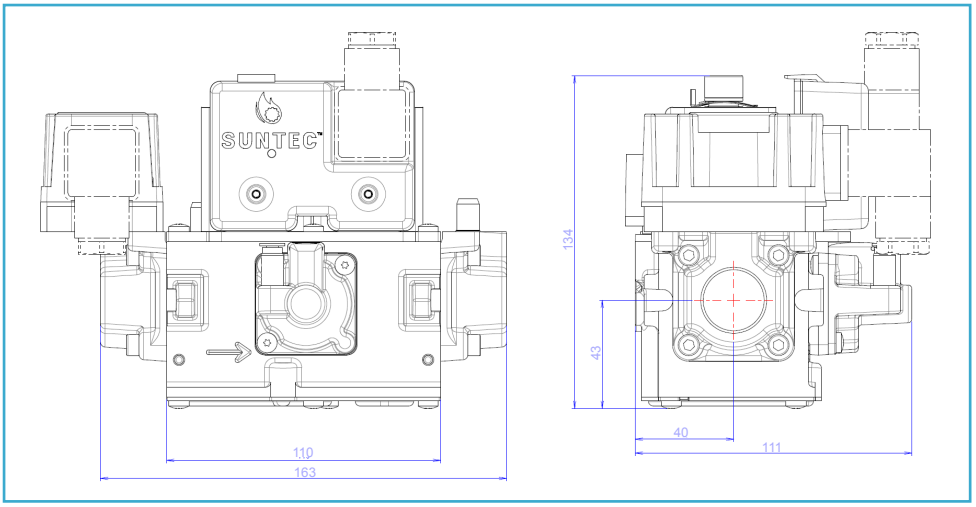

Subject to change without prior notification. All rights reserved.

Contact SUNTEC for more info : information@suntec.fr

Suntec Industries France -1, rue Lavoisier - CS 60102 - F-21603 LONGVIC Cedex
Tel : +33 (0)3 80 70 60 70 - Fax : +33 (0)3 80 70 61 11 - Mail : information@suntec.fr - www.suntec.fr